STATE OF VERMONT
AGENCY OF TRANSPORTATION

PROPOSED IMPROVEMENT
BRIDGE PROJECT

TOWN OF CALAIS
COUNTY OF WASHINGTON

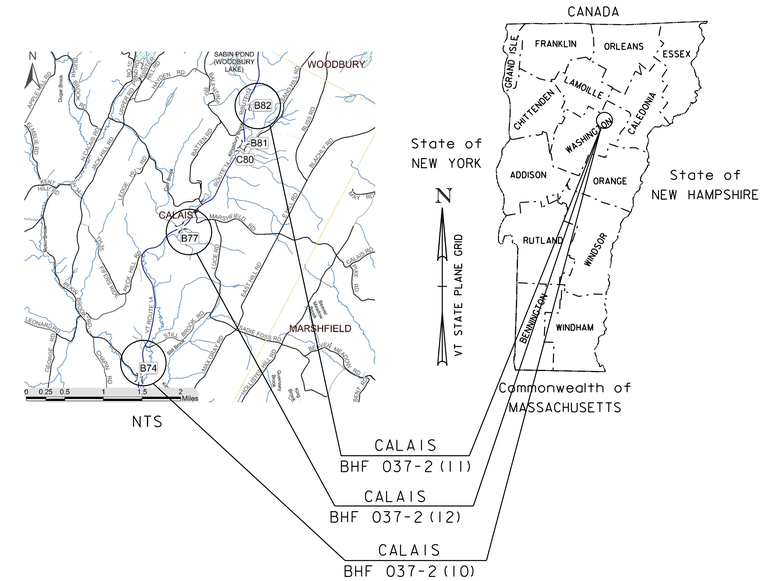

CALAIS BHF 037-2(10)

ROUTE NO : VT RTE 14, (RURAL MINOR ARTERIAL)
BRIDGE NO : 74

PROJECT LOCATION: 5.2 MILES NORTH OF JUNCTION WITH US ROUTE 2

PROJECT DESCRIPTION: REMOVAL AND REPLACEMENT OF BRIDGE #74 WITH RELATED APPROACH ROADWAY AND CHANNEL WORK.

LENGTH OF STRUCTURE: 63.84 FEET
LENGTH OF ROADWAY: 86.16 FEET
LENGTH OF PROJECT: 150.00 FEET

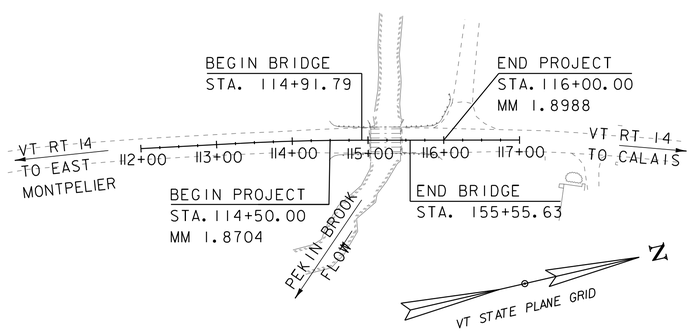

CALAIS BHF 037-2(12)

ROUTE NO : VT RTE 14, (RURAL MINOR ARTERIAL)
BRIDGE NO : 77

PROJECT LOCATION: 7.6 MILES NORTH OF JUNCTION WITH US ROUTE 2

PROJECT DESCRIPTION: REMOVAL AND REPLACEMENT OF BRIDGE #77 SUPERSTRUCTURE WITH RELATED APPROACH ROADWAY WORK.

LENGTH OF STRUCTURE: 37.50 FEET
LENGTH OF ROADWAY: 162.50 FEET
LENGTH OF PROJECT: 200.00 FEET

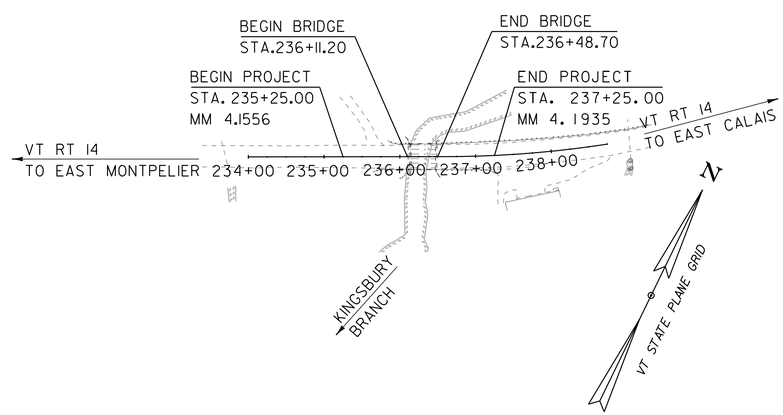

CALAIS BHF 037-2(11)

ROUTE NO: VT RTE 14, (RURAL MINOR ARTERIAL)
BRIDGE NO: BRIDGE 82

PROJECT LOCATION: 9.40 MILES NORTH OF JUNCTION WITH US ROUTE 2

PROJECT DESCRIPTION: REMOVAL AND REPLACEMENT OF BRIDGE #82 WITH RELATED APPROACH ROADWAY AND CHANNEL WORK.

LENGTH OF STRUCTURE: 58.85 FEET
LENGTH OF ROADWAY: 466.15 FEET
LENGTH OF PROJECT: 525.00 FEET

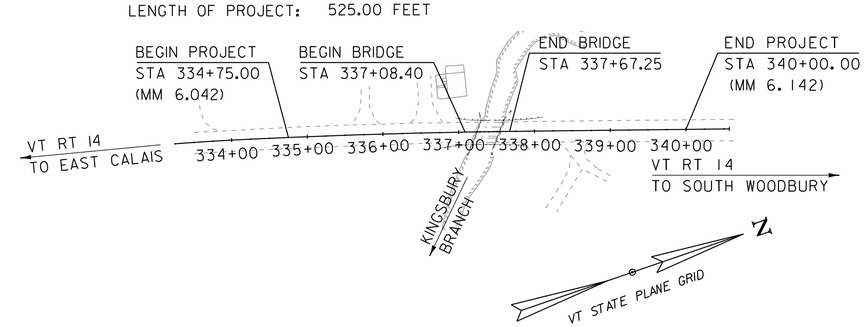

CONSTRUCTION IS TO BE CARRIED ON IN ACCORDANCE WITH THESE PLANS AND THE STANDARD SPECIFICATIONS FOR CONSTRUCTION DATED 2018, AS APPROVED BY THE FEDERAL HIGHWAY ADMINISTRATION ON APRIL 13, 2018 FOR USE ON THIS PROJECT, INCLUDING ALL SUBSEQUENT REVISIONS AND SUCH REVISED SPECIFICATIONS AND SPECIAL PROVISIONS AS ARE INCORPORATED IN THESE PLANS.

QUALITY ASSURANCE PROGRAM : LEVEL 2

SURVEYED BY : R. GILMAN
SURVEYED DATE : 05-30-2012

DATUM
VERTICAL NAVD88
HORIZONTAL NAD83 (2007)

SCALE 1" = 100'-0"
100 0 100

DEPARTMENT OF TRANSPORTATION
FEDERAL HIGHWAY ADMINISTRATOR
APPROVED _____ DATE _____

HIGHWAY DIVISION, CHIEF ENGINEER
APPROVED _____ DATE _____

PROJECT MANAGER : G. LAROCHE P.E.

PROJECT NAME : CALAIS
PROJECT NUMBER : BHF 037-2(10)

SHEET 1 OF 134 SHEETS

COMPOSITE DETAILS

1	COMBINED TITLE SHEET
2	INDEX OF SHEETS
3	COMBINED PROJECT NOTES
4	LEGEND SHEET

BHF 037-2(10) BRIDGE 74

5	TITLE SHEET
6	PRELIMINARY INFORMATION SHEET
7 - 8	TYPICAL SECTIONS 1-2
9	PROJECT NOTES (10)
10 - 11	QUANTITY SHEET 1-2
12	BRIDGE QUANTITY SHEET
13	TIE SHEET
14	ALIGNMENT SHEET
15	EXISTING CONDITIONS
16	LAYOUT SHEET
17	TRAFFIC SIGN LAYOUT
18	TRAFFIC SIGN SUMMARY SHEET
19	PROFILE SHEET
20	BANKING DIAGRAM & MATERIAL TRANSITION
21	PHASE TYPCAL SECTIONS
22	PHASE 1 LAYOUT SHEET
23	PHASE 2 LAYOUT SHEET
24	UTILITY LAYOUT SHEET
25	BORING INFORMATION SHEET
26 - 28	BORING LOG SHEET 1-3
29	RAIL LAYOUT
30	DECK REINFORCING
31	FRAMING PLAN
32	SUPERSTRUCTURE DETAILS
33	BRIDGE SEAT REINFORCEMENT
34	BEARING DETAILS
35	APPROACH SLAB DETAILS
36	ABUTMENT TYPICALS
37	ABUTMENT 1 PLAN
38	ABUTMENT 2 PLAN
39	ABUTMENT REINFORCING
40	REINFORCING STEEL SCHEDULE
41 - 44	MAINLINE CROSS SECTIONS 1-4
45 - 46	CHANNEL CROSS SECTION 1-2
47 - 48	EROSION CONTROL DETAILS 1-2

BHF 037-2(11) BRIDGE 82

84	TITLE SHEET
85	PRELIMINARY INFORMATION SHEET
86 - 87	TYPICAL SECTIONS 1-2
88	PROJECT NOTES (11)
89 - 91	QUANTITY SHEET 1-3
92	BRIDGE QUANTITY SHEET
93	TIE SHEET
94 - 95	Alingment Sheet 1-2
96	EXISTING CONDITIONS
97	LAYOUT
98	PROFILE
99 - 100	BANKING & MATERIAL TRANSITION 1-2
101	PHASE TYPICAL SECTIONS
102	PHASE 1 LAYOUT
103	PHASE 2 LAYOUT
104	UTILITY LAYOUT SHEET
105	BORING INFORMATION SHEET
106 - 109	BORING LOGS SHEET 1-4
110	NEXT BEAM LAYOUT
111 - 113	NEXT BEAM DETAILS 1-3
114	BEAM END CLOSURE POUR DETAILS
115	BEAM END CLOSURE POUR
116	ELASTOMERIC BEARING DETAILS
117	APPROACH SLAB DETAILS
118	ABUTMENT 1 REINFORCEMENT SECTIONS
119	ABUTMENT 1 PLAN
120	ABUTMENT 1 REINFORCING
121	ABUTMENT 2 REINFORCEMENT SECTIONS
122	ABUTMENT 2 PLAN
123	ABUTMENT 2 REINFORCING
124	REINFORCING STEEL SCHEDULE
125	RAIL LAYOUT
126	BOX BEAM GUARD RAIL DETAILS
127	BOX BEAM END TERMINAL, TYPE IIA
128 - 132	MAINLINE CROSS SECTIONS 1-5
133 - 134	CHANNEL CROSS SECTIONS 1-2

STANDARDS LIST

B-5	SLOPE GRADING, EMBANKMENTS, MUCK	06-01-1994
D-4	VARIOUS DRAINAGE DETAILS	08-13-2007
D-30	UNDERDRAIN CONSTRUCTION DETAILS	08-13-2007
E-121	STANDARD SIGN PLACEMENT - CONVENTIONAL ROAD	08-08-1995
E-136B	STATE ROUTE MARKER SIGN DETAILS	08-08-1995
E-193	PAVEMENT MARKING DETAILS	08-18-1995
G-1Bm	BOX BEAM GUARD RAIL	06-13-1997
G-19	GENERIC GRADING PLANS FOR GUARDRAIL END TERMINALS	11-15-2002
J-3	MAIL BOX SUPPORT DETAILS	08-07-1995
S-364A	BRIDGE RAILING, GALVANIZED 3 RAIL BOX BEAM	02-02-2017
S-364B	GUARDRAIL APPROACH SECTION, GALVANIZED 3 RAIL BOX BEAM	02-02-2017
S-364C	GUARDRAIL APPROACH SECTION, GALVANIZED 3 RAIL BOX BEAM	02-02-2017
S-364D	GUARDRAIL APPROACH SECTION, GALVANIZED 3 RAIL BOX BEAM	02-02-2017
T-1	TRAFFIC CONTROL GENERAL NOTES	04-25-2016
T-2	TRAFFIC SIGN GENERAL NOTES	04-25-2016
T-10	CONVENTIONAL ROADS CONSTRUCTION APPROACH SIGNING	08-06-2012
T-28	CONSTRUCTION SIGN DETAILS	08-06-2012
T-29	CONSTRUCTION SIGN DETAILS	08-06-2012
T-30	CONSTRUCTION SIGN DETAILS	08-06-2012
T-31	CONSTRUCTION SIGN DETAILS	08-06-2012
T-35	CONSTRUCTION ZONE LONGITUDINAL DROP-OFFS	08-06-2012
T-40	DELINEATORS AND MILEPOSTS	01-02-2013
T-42	BRIDGE NUMBER PLAQUE	04-09-2014
T-45	SQUARE TUBE SIGN POST AND ANCHOR	01-02-2013
T-70	VERMONT REGULATORY SIGN DETAILS	04-25-2016

BHF 037-2(12) BRIDGE 77

49	TITLE SHEET
50	PRELIMINARY INFORMATION SHEET
51	TYPICAL SECTIONS
52	PROJECT NOTES (12)
53 - 54	QUANTITY SHEET 1-2
55	BRIDGE QUANTITY SHEET
56	TIE SHEET
57 - 58	ALIGNMENT SHEET 1-2
59	EXISTING CONDITIONS
60	LAYOUT SHEET
61	PROFILE SHEET
62	BANKING DIAGRAM & MATERIAL TRANSITION
63	PHASE TYPICAL SECTIONS
64	TRAFFIC CONTROL PHASE 1
65	TRAFFIC CONTROL PHASE 2
66	GUARDRAIL LAYOUT SHEET
67	APROACH RAIL DETAILS
68	FRAMING PLAN
69	SOLID SLAB DETAILS
70	END BEAM REINFORCING DETAILS
71	ELASTOMERIC BEARING DETAILS
72	APPROACH SLAB DETAILS
73	ABUTMENT TYPICAL SECTIONS
74	ABUTMENT 1
75	ABUTMENT 2
76	ABUTMENT REINFORCING
77	WINGWALL REINFORCING
78	REINFORCING STEEL SCHEDULE
79 - 81	MAINLINE CROSS SECTION 1-3
82 - 83	CHANNEL CROSS SECTION 1-2

COMPOSITE DETAILS

DETAIL SHEETS

SD-501.00	CONCRETE DETAILS AND NOTES	2/9/2012
SD-502.00	CONCRETE DETAILS AND NOTES	10/10/2012
SD-516.10	BRIDGE JOINT ASHPALTIC PLUG	8/29/2011
SD-601.00	STRUCTURAL STEEL DETAILS AND NOTES	6/4/2010
SD-602.00	STRUCTURAL STEEL PLATE GIRDER DETAILS AND NOTES	5/2/2011
HSD-400.01	SAFETY EDGE DETAILS	1/5/2018
HSD-621.06	GUARDRAIL TERMINAL LABEL DETAIL	2/27/2017

GENERAL

1. ALL MATERIALS AND CONSTRUCTION SHALL CONFORM TO THE STATE OF VERMONT AGENCY OF TRANSPORTATION 2018 STANDARD SPECIFICATIONS FOR CONSTRUCTION, THE AASHTO LRFD BRIDGE DESIGN SPECIFICATIONS, 8th EDITION, AND THEIR LATEST REVISIONS.
2. ALL DIMENSIONS SHOWN IN THE PLANS ARE HORIZONTAL OR VERTICAL AND ARE GIVEN AT 68 DEGREES FAHRENHEIT, UNLESS NOTED OTHERWISE.
3. THE CONTRACTOR SHALL PROVIDE A SITE-SPECIFIC EROSION PREVENTION AND SEDIMENT CONTROL PLAN IN ACCORDANCE WITH SECTION 653 OF THE STANDARD SPECIFICATIONS FOR CONSTRUCTION. ESTIMATED QUANTITIES FOR EPSC WORK HAVE BEEN INCLUDED IN THE CONTRACT FOR BIDDING PURPOSES. IF THE CONTRACTOR'S EPSC PLAN REQUIRES ITEMS OF WORK THAT ARE NOT INCLUDED IN THE PLANS, THE EXTRA WORK WILL BE PAID FOR AS PART OF ITEM 653.03 MAINTENANCE OF EPSC PLAN.

CONCRETE AND REINFORCING STEEL

4. WATER REPELLENT, SILANE, SHALL BE APPLIED TO ALL EXPOSED CONCRETE SURFACES, EXCEPT THE BOTTOM FACES OF THE SUPERSTRUCTURE BETWEEN DRIP NOTCHES. PAYMENT FOR SILANE WILL BE MADE UNDER ITEM 514.10 "WATER REPELLENT, SILANE".
5. PROVIDE REINFORCING AND MECHANICAL COUPLERS FOR TESTING IN ACCORDANCE WITH THE "VERMONT AGENCY OF TRANSPORTATION MATERIALS SAMPLING MANUAL".

TEMPORARY ROADWAY AND TRAFFIC CONTROL

6. THE CONTRACTOR IS RESPONSIBLE FOR THE DESIGN, SUBMITTAL, AND IMPLEMENTATION OF SITE-SPECIFIC TRAFFIC CONTROL PLAN. THE SITE-SPECIFIC TRAFFIC CONTROL PLAN SHALL BE DESIGNED IN ACCORDANCE WITH SECTION 641.
7. THE CONTRACTOR'S SITE-SPECIFIC TRAFFIC CONTROL PLAN SHALL MEET THE SPECIFIED DIMENSIONS HEREIN. REFERENCE PHASE 1 LAYOUT, PHASE 2 LAYOUT, AND PHASING TYPICAL SECTIONS FOR ADDITIONAL DETAILS AND REQUIREMENTS.
8. ANY REMOVAL, COVERING AND/OR RESETTING OF EXISTING TRAFFIC SIGNS, AS DEEMED NECESSARY BY THE RESIDENT ENGINEER, WILL BE INCIDENTAL TO THE ITEM 641.11 -- TRAFFIC CONTROL, ALL-INCLUSIVE.
9. ANY TEMPORARY MEANS OF SUPPORTING EXCAVATION NECESSARY TO MAINTAIN TRAFFIC WILL BE INCLUDED IN THE PAYMENT OF ITEM 641.11 TRAFFIC CONTROL, ALL-INCLUSIVE. CONSTRUCTION DRAWINGS SHALL BE REQUIRED AS PER SUBSECTION 105.03.

TEMPORARY TRAFFIC SIGNALS

10. ALL MATERIALS AND CONSTRUCTION SHALL CONFORM TO THE STATE OF VERMONT AGENCY OF TRANSPORTATION'S (VTrans) "STANDARD SPECIFICATIONS FOR CONSTRUCTION", DATED 2018, WITH CURRENT MODIFICATIONS.SIGNAL TIMING/TIMING ADJUSTMENTS SHALL BE ACCOMPLISHED WITHIN A 48 HOUR PERIOD AND PAYMENT WILL BE INCIDENTAL TO ITEM 678.40 "TEMPORARY TRAFFIC SIGNAL SYSTEM".
11. TEMPORARY TRAFFIC SIGNAL SYSTEM SHALL BE DESIGNED AND INSTALLED IN ACCORDANCE WITH ITEM 678.40 "TEMPORARY TRAFFIC SIGNAL SYSTEM" AND IN COMPLIANCE WITH THE LATEST EDITION OF THE MUTCD.
12. SIGNAL FACES SHALL BE LED AND CONSIST OF 12 INCH LENSES (RED, YELLOW AND GREEN).
13. THE BOTTOM OF THE HOUSING OF A SIGNAL FACE SUSPENDED OVER A ROADWAY SHALL NOT BE LESS THAN 16.5 FEET NOR MORE THAN 19.0 FEET ABOVE THE PAVEMENT GRADE AT THE CENTER OF THE ROADWAY. THE BOTTOM OF A SIGNAL FACE NOT MOUNTED OVER A ROADWAY SHALL NOT BE LESS THAN 8.0 FEET NOR MORE THAN 15.0 FEET ABOVE THE GROUND. CAUTION SHOULD BE USED TO ENSURE COMPLIANCE WITH THE HEIGHT REQUIREMENT IN THE EVENT THE NEW APPROACH GRADE DIFFER SIGNIFICANTLY FROM THE FULL ROADWAY GRADE.
14. SIGNAL FACES FOR ANY ONE APPROACH SHALL NOT BE LESS THAN 8 FEET APART MEASURED HORIZONTALLY BETWEEN CENTER FACES.
15. THE CONTRACTOR SHALL HAVE THE OPTION OF INSTALLING SPAN WIRE OR CANTILEVER MAST ARM TRAFFIC SIGNALS IN PLACE OF A PORTABLE SIGNAL SYSTEM. DESIGN OF SUCH SYSTEM, INCLUDING REQUIRED POLE LOCATIONS, ANY REQUIRED GUYING, AND POWER CONNECTION SHALL BE THE RESPONSIBLITY OF THE CONTRACTOR. PAYMENT WILL BE CONSIDERED INCIDENTAL TO 678.40 "TEMPORARY TRAFFIC SIGNAL SYSTEM".
16. SIGNAL HEAD PLACEMENT IS CRITICAL. HEADS SHALL BE ADJUSTED TO REFLECT LANE LOCATION CHANGES AS REQUIRED.
17. POLES SUPPORTING SPAN WIRES AND/OR MAST ARMS SHALL BE ADEQUATELY BRACED OR GUYED AND SHALL BE PLACED SO AS NOT TO CREATE A HAZARD TO THE TRAVELLING PUBLIC.
18. LUMINAIRES SHALL BE INSTALLED AT EACH OF THE APPROACHES TO ADEQUATELY LIGHT THE STOP BAR AREAS. HIGH PRESSURE SODIUM OR LED LUMINAIRES ARE ACCEPTABLE FORMS OF LAMPS. THE MOUNTING HEIGHT FOR LUMINAIRES SHALL BE DETERMINED BY THE CONTRACTOR. ILLUMINANCE SHALL BE MEASURED AT NIGHTTIME AFTER INSTALLATION AT EACH STOP BAR. ILLUMINANCE SHALL BE NO LESS THAN 1.0 FOOT-CANDLES AND NOT TO EXCEED 2.0 FOOT-CANDLES. PAYMENT WILL BE CONSIDERED INCIDENTAL TO ITEM 678.40 "TEMPORARY TRAFFIC SIGNAL SYSTEM".
19. ALL TEMPORARY SIGNAL EQUIPMENT, SIGNS, ETC. SHALL BELONG TO THE CONTRACTOR AT THE END OF THE PROJECT AND THE CONTRACTOR SHALL BE RESPONSIBLE FOR THEIR REMOVAL INCLUDING UTILITY POLES, WIRES, ETC. PAYMENT WILL BE CONSIDERED INCIDENTAL TO ITEM 678.40 "TEMPORARY TRAFFIC SIGNAL SYSTEM".
20. STOP BARS SHALL BE LOCATED A MINIMUM OF 40' AND A MAXIMUM OF 120' FROM THE NEAREST SIGNAL HEAD.
21. THE CONTRACTOR SHALL BE RESPONSIBLE FOR DETERMINING SIGNAL PHASING AND TIMING. THE CONTRACTOR SHALL SUBMIT A PHASING DIAGRAM AND TIMING SCHEDULE TO THE ENGINEER FOR APPROVAL. THE CONTRACTOR SHALL MAKE THE SIGNALS OPERATIONAL ONLY AFTER RECEIVING APPROVAL OF BOTH THE PHASING DIAGRAM AND TIMING SCHEDULE BY THE ENGINEER. DEVELOPMENT OF THE PHASING DIAGRAM AND TIMING SCHEDULE WILL BE CONSIDERED INCIDENTAL TO ITEM 678.40 "TEMPORARY TRAFFIC SIGNAL SYSTEM".

GENERAL INFORMATION

SYMBOLOGY LEGEND NOTE

THE SYMBOLOGY ON THIS SHEET IS INTENDED TO COVER STANDARD CONVENTIONAL SYMBOLOGY. THE SYMBOLOGY IS USED FOR EXISTING & PROPOSED FEATURES WITH HEAVIER LINEWEIGHT, IN COMBINATION WITH PROJECT ANNOTATION, AS NOTED ON PROJECT PLAN SHEETS. THIS LEGEND SHEET COVERS THE BASICS. SYMBOLOGY ON PLANS MAY VARY, PLAN ANNOTATIONS AND NOTES SHOULD BE USED TO CLARIFY AS NEEDED.

R.O.W. ABBREVIATIONS (CODES) & SYMBOLS

POINT	CODE	DESCRIPTION
	BF	BARRIER FENCE
	CH	CHANNEL EASEMENT
	CONST	CONSTRUCTION EASEMENT
	CUL	CULVERT EASEMENT
	D&C	DISCONNECT & CONNECT
	DIT	DITCH EASEMENT
	DR	DRAINAGE EASEMENT
	DRIVE	DRIVEWAY EASEMENT
	EC	EROSION CONTROL
	HWY	HIGHWAY EASEMENT
	I&M	INSTALL & MAINTAIN EASEMENT
	LAND	LANDSCAPE EASEMENT
	PDF	PROJECT DEMARCATION FENCE
	R&RES	REMOVE & RESET
	R&REP	REMOVE & REPLACE
	R.T.& I.	RIGHT, TITLE, AND INTEREST
	SR	SLOPE RIGHT
	UE	UTILITY EASEMENT
	(P)	PERMANENT EASEMENT
	(T)	TEMPORARY EASEMENT
■	BNDNS	BOUND SET
⊡	BNDNS	BOUND TO BE SET
◎	IPNF	IRON PIN FOUND
●	IPNS	IRON PIN TO BE SET
⊠	CALC	EXISTING ROW POINT
○	PROW	PROPOSED ROW POINT
[LENGTH]		LENGTH CARRIED ON NEXT SHEET

COMMON TOPOGRAPHIC POINT SYMBOLS

POINT	CODE	DESCRIPTION
	APL	BOUND APPARENT LOCATION
	BM	BENCHMARK
	BND	BOUND
	CB	CATCH BASIN
	COMB	COMBINATION POLE
	DITHR	DROP INLET THROATED DNC
	EL	ELECTRIC POWER POLE
	FPOLE	FLAGPOLE
	GASFIL	GAS FILLER
	GP	GUIDE POST
	GSO	GAS SHUT OFF
	GUY	GUY POLE
	GUYW	GUY WIRE
	GV	GATE VALVE
	H	TREE HARDWOOD
	HCTRL	CONTROL HORIZONTAL
	HVCTRL	CONTROL HORIZ.& VERTICAL
	HYD	HYDRANT
	IP	IRON PIN
	IPIPE	IRON PIPE
	LI	LIGHT - STREET OR YARD
	MB	MAILBOX
	MH	MANHOLE (MH)
	MM	MILE MARKER
	PM	PARKING METER
	PMK	PROJECT MARKER
	POST	POST STONE/WOOD
	RRSIG	RAILROAD SIGNAL
	RRSL	RAILROAD SWITCH LEVER
	S	TREE SOFTWOOD
	SAT	SATELLITE DISH
	SHRUB	SHRUB
	SIGN	SIGN
	STUMP	STUMP
	TEL	TELEPHONE POLE
	TIE	TIE
	TSIGN	SIGN W/DOUBLE POST
	VCTRL	CONTROL VERTICAL
	WELL	WELL
	WSO	WATER SHUT OFF

THESE ARE COMMON VAOT SURVEY POINT SYMBOLS FOR EXISTING FEATURES, ALSO USED FOR PROPOSED FEATURES WITH HEAVIER LINEWEIGHT, IN COMBINATION WITH PROPOSED ANNOTATION.

PROPOSED GEOMETRY CODES

CODE	DESCRIPTION
PC	POINT OF CURVATURE
PI	POINT OF INTERSECTION
CC	CENTER OF CURVE
PT	POINT OF TANGENCY
PCC	POINT OF COMPOUND CURVE
PRC	POINT OF REVERSE CURVE
POB	POINT OF BEGINNING
POE	POINT OF ENDING
STA	STATION PREFIX
AH	AHEAD STATION SUFFIX
BK	BACK STATION SUFFIX
D	CURVE DEGREE OF (100FT)
R	CURVE RADIUS OF
T	CURVE TANGENT LENGTH
L	CURVE LENGTH OF
E	CURVE EXTERNAL DISTANCE
CB	CHORD BEARING

UTILITY SYMBOLOGY

UNDERGROUND UTILITIES

UGU	UTILITY (GENERIC-UNKNOWN)
UT	TELEPHONE
UE	ELECTRIC
UC	CABLE (TV)
UEC	ELECTRIC+CABLE
UET	ELECTRIC+TELEPHONE
UCT	CABLE+TELEPHONE
UECT	ELECTRIC+CABLE+TELEPHONE
G	GAS LINE
W	WATER LINE
S	SANITARY SEWER (SEPTIC)

ABOVE GROUND UTILITIES (AERIAL)

AGU	UTILITY (GENERIC-UNKNOWN)
T	TELEPHONE
E	ELECTRIC
C	CABLE (TV)
EC	ELECTRIC+CABLE
ET	ELECTRIC+TELEPHONE
AER E&T	ELECTRIC+TELEPHONE
CT	CABLE+TELEPHONE
ECT	ELECTRIC+CABLE+TELEPHONE
	UTILITY POLE GUY WIRE

PROJECT CONSTRUCTION SYMBOLOGY

PROJECT DESIGN & LAYOUT SYMBOLOGY

CZ	CLEAR ZONE
	PLAN LAYOUT MATCHLINE

PROJECT CONSTRUCTION FEATURES

	TOP OF CUT SLOPE
	TOE OF FILL SLOPE
	STONE FILL
	BOTTOM OF DITCH ℄
	CULVERT PROPOSED
	STRUCTURE SUBSURFACE
PDF	PROJECT DEMARCATION FENCE
BF	BARRIER FENCE
	TREE PROTECTION ZONE (TPZ)
	STRIPING LINE REMOVAL
	SHEET PILES

CONVENTIONAL BOUNDARY SYMBOLOGY

BOUNDARY LINES

TOWN LINE	TOWN BOUNDARY LINE
COUNTY LINE	COUNTY BOUNDARY LINE
STATE LINE	STATE BOUNDARY LINE
	PROPOSED STATE R.O.W. (LIMITED ACCESS)
	PROPOSED STATE R.O.W.
	STATE ROW (LIMITED ACCESS)
	STATE ROW
	TOWN ROW
	PERMANENT EASEMENT LINE (P)
	TEMPORARY EASEMENT LINE (T)
	SURVEY LINE
P/L	PROPERTY LINE (P/L)
SR	SLOPE RIGHTS
6f	6F PROPERTY BOUNDARY
4f	4F PROPERTY BOUNDARY
HAZ	HAZARDOUS WASTE

EPSC LAYOUT PLAN SYMBOLOGY

EPSC MEASURES

	FILTER CURTAIN
	SILT FENCE
	SILT FENCE WOVEN WIRE
	CHECK DAM
	DISTURBED AREAS REQUIRING RE-VEGETATION
	EROSION MATTING

SEE EPSC DETAIL SHEETS FOR ADDITIONAL SYMBOLOGY

ENVIRONMENTAL RESOURCES

	WETLAND BOUNDARY
	RIPARIAN BUFFER ZONE
	WETLAND BUFFER ZONE
	SOIL TYPE BOUNDARY
T&E	THREATENED & ENDANGERED SPECIES
HAZ	HAZARDOUS WASTE AREA
AG	AGRICULTURAL LAND
HABITAT	FISH & WILDLIFE HABITAT
FLOOD PLAIN	FLOOD PLAIN
OHW	ORDINARY HIGH WATER (OHW)
	STORM WATER
	USDA FOREST SERVICE LANDS
	WILDLIFE HABITAT SUIT/CONN

ARCHEOLOGICAL & HISTORIC

ARCH	ARCHEOLOGICAL BOUNDARY
HISTORIC DIST	HISTORIC DISTRICT BOUNDARY
HISTORIC	HISTORIC AREA
H	HISTORIC STRUCTURE

CONVENTIONAL TOPOGRAPHIC SYMBOLOGY

EXISTING FEATURES

	ROAD EDGE PAVEMENT
	ROAD EDGE GRAVEL
	DRIVEWAY EDGE
	DITCH
	FOUNDATION
	FENCE (EXISTING)
	FENCE WOOD POST
	FENCE STEEL POST
	GARDEN
	ROAD GUARDRAIL
	RAILROAD TRACKS
	CULVERT (EXISTING)
	STONE WALL
	WALL
	WOOD LINE
	BRUSH LINE
	HEDGE
	BODY OF WATER EDGE
	LEDGE EXPOSED

PROJECT NAME: CALAS
PROJECT NUMBER: BHF 037-2(10)

FILE NAME: s12b146lgnd.dgn
PROJECT LEADER: W.PELLETIER
DESIGNED BY: F.BARROWS
LEGEND SHEET

PLOT DATE: 02-JUN-2020
DRAWN BY: G. LAROCHE
CHECKED BY: F.BARROWS
SHEET 4 OF 134

STATE OF VERMONT
AGENCY OF TRANSPORTATION

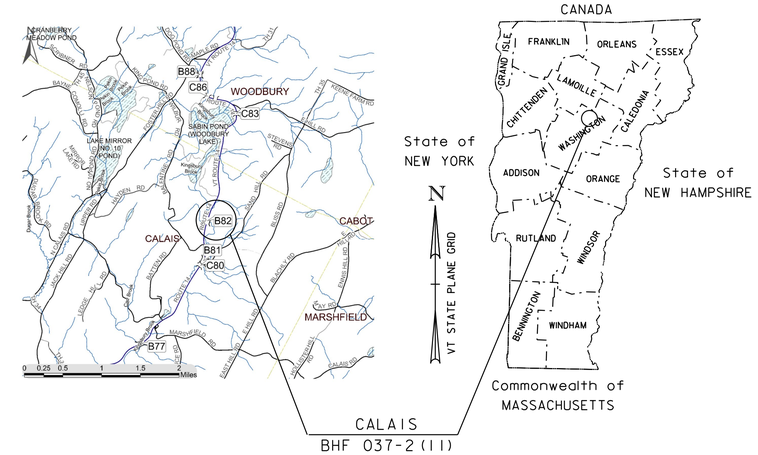

PROPOSED IMPROVEMENT
BRIDGE PROJECT

TOWN OF CALAIS
COUNTY OF WASHINGTON

ROUTE NO: VT 14 RURAL MINOR ARTERIAL BRIDGE NO: 82

PROJECT LOCATION: 9.40 MILES NORTH OF JUNCTION WITH US ROUTE 2

PROJECT DESCRIPTION: REMOVAL AND REPLACEMENT OF BRIDGE #82 WITH RELATED APPROACH ROADWAY AND CHANNEL WORK.

LENGTH OF STRUCTURE: 58.85 FEET
LENGTH OF ROADWAY: 466.15 FEET
LENGTH OF PROJECT: 525.00 FEET

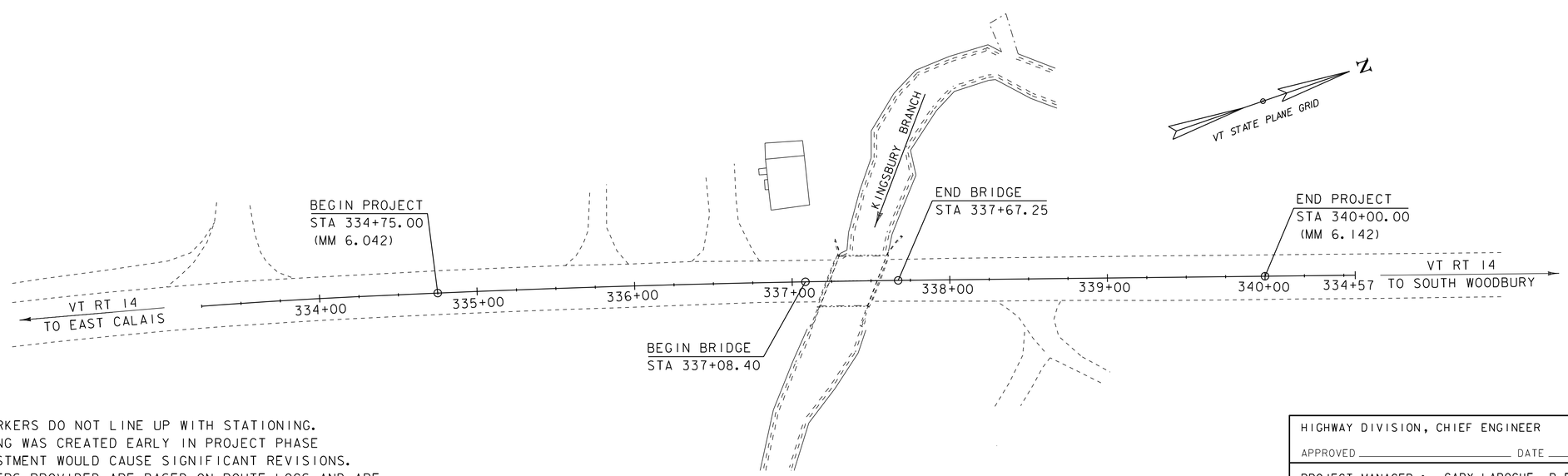

CONSTRUCTION IS TO BE CARRIED ON IN ACCORDANCE WITH THESE PLANS AND THE STANDARD SPECIFICATIONS FOR CONSTRUCTION DATED 2018, AS APPROVED BY THE FEDERAL HIGHWAY ADMINISTRATION ON APRIL 13, 2018 FOR USE ON THIS PROJECT, INCLUDING ALL SUBSEQUENT REVISIONS AND SUCH REVISED SPECIFICATIONS AND SPECIAL PROVISIONS AS ARE INCORPORATED IN THESE PLANS.

QUALITY ASSURANCE PROGRAM : LEVEL 2

SURVEYED BY : R.GILMAN
SURVEYED DATE : 04-30-2012

DATUM
VERTICAL NAVD88
HORIZONTAL NAD83 (1992)

* MILEMARKERS DO NOT LINE UP WITH STATIONING. STATIONING WAS CREATED EARLY IN PROJECT PHASE AND ADJUSTMENT WOULD CAUSE SIGNIFICANT REVISIONS. MILEMARKERS PROVIDED ARE BASED ON ROUTE LOGS AND ARE CONSIDERED ACCURATE.

TRUE STATIONING = PROJECT STATIONING - 1571.44 FT.

SCALE 1" = 40'-0"
40 0 40

HIGHWAY DIVISION, CHIEF ENGINEER
APPROVED _____ DATE _____

PROJECT MANAGER : GARY LAROCHE, P.E.

PROJECT NAME : CALAIS
PROJECT NUMBER : BHF 037-2(11)

SHEET 84 OF 134 SHEETS

STATE OF VERMONT
AGENCY OF TRANSPORTATION

PRELIMINARY INFORMATION SHEET (BRIDGE)

Version
LRFD

INDEX OF SHEETS

PLAN SHEETS

SEE COMBINED PRELIMINARY INFORMATION SHEET FOR CALAIS (II) INDEX

DETAIL SHEETS

STANDARDS LIST

FINAL HYDRAULIC REPORT

HYDROLOGIC DATA

Date: July 2014

DRAINAGE AREA : 15.1 sq. mi.
CHARACTER OF TERRAIN : Hilly, mostly forested, small ponds
STREAM CHARACTERISTICS : Incised, sinuous, alluvial
NATURE OF STREAMBED : Medium gravel, sand and silt

PEAK FLOW DATA

Q 2.33 =	770 cfs	Q 50 =	2240 cfs
Q 10 =	1375 cfs	Q 100 =	2560 cfs
Q 25 =	1810 cfs	Q 500 =	3360 cfs

DATE OF FLOOD OF RECORD : Unknown
ESTIMATED DISCHARGE: Unknown
WATER SURFACE ELEV.: Unknown
NATURAL STREAM VELOCITY : @ Q50 = 12.0 fps
ICE CONDITIONS : Moderate
DEBRIS: Moderate
DOES THE STREAM REACH MAXIMUM HIGHWATER ELEV. RAPIDLY? No
IS ORDINARY RISE RAPID? No
IS STAGE AFFECTED BY UPSTREAM OR DOWNSTREAM CONDITIONS? No
IF YES, DESCRIBE:

WATERSHED STORAGE: 5%
HEADWATERS:
UNIFORM: X
IMMEDIATELY ABOVE SITE:

EXISTING STRUCTURE INFORMATION

STRUCTURE TYPE: Single span concrete t-beam bridge
YEAR BUILT: 1919, Reconstructed 1946
CLEAR SPAN(NORMAL TO STREAM): ~30'
VERTICAL CLEARANCE ABOVE STREAMBED: ~6'
WATERWAY OF FULL OPENING: 165 sq. ft.
DISPOSITION OF STRUCTURE: Remove and replace
TYPE OF MATERIAL UNDER SUBSTRUCTURE: See borings

WATER SURFACE ELEVATIONS AT:

Q2.33 =	896.4'	VELOCITY =	8.2 fps
Q10 =	899.5'	"	11.8 fps
Q25 =	901.1'	"	9.4 fps
Q50 =	901.7'	"	10.0 fps
Q100 =	902.1'	"	10.4 fps

LONG TERM STREAMBED CHANGES: None noted

IS THE ROADWAY OVERTOPPED BELOW Q100: Yes
FREQUENCY: Below Q25
RELIEF ELEVATION: 900.5'
DISCHARGE OVER ROAD @Q100: 760 cfs

UPSTREAM STRUCTURE

TOWN:	Woodbury	DISTANCE:	9150'
HIGHWAY # :	VT 14	STRUCTURE #:	85
CLEAR SPAN:	11'	CLEAR HEIGHT:	
YEAR BUILT:	1947	FULL WATERWAY:	78 sq. ft.
STRUCTURE TYPE:	CGMPPA		

DOWNSTREAM STRUCTURE

TOWN:	Calais	DISTANCE:	4200'
HIGHWAY # :	VT 14	STRUCTURE #:	81
CLEAR SPAN:	32'	CLEAR HEIGHT:	
YEAR BUILT:	1919, reconstructed in 1946	FULL WATERWAY:	
STRUCTURE TYPE:	Concrete t-beam		

LRFR LOAD RATING FACTORS

LOADING LEVELS	TRUCK						
	H-20	HL-93	3S2	6 AXLE	3A. STR.	4A. STR.	5A. SEMI
TONNAGE	20	36	36	66	30	34.5	38
INVENTORY	1.98	1.08					
POSTING							
OPERATING	2.57	1.41	2.38	1.42	1.84	1.67	1.94
COMMENTS:							

PROPOSED STRUCTURE

STRUCTURE TYPE: Single span concrete NEXT beam bridge

CLEAR SPAN(NORMAL TO STREAM): ~51'
VERTICAL CLEARANCE ABOVE STREAMBED: ~8'
WATERWAY OF FULL OPENING: 350 sq. ft.

WATER SURFACE ELEVATIONS AT:

Q2.33 =	896.6'	VELOCITY=	8.0 fps
Q10 =	897.9'	"	8.8 fps
Q25 =	898.4'	"	11.0 fps
Q50 =	899.5'	"	11.1 fps
Q100 =	901.1'	"	10.6 fps

IS THE ROADWAY OVERTOPPED BELOW Q100: Yes
FREQUENCY: Above Q50
RELIEF ELEVATION: 900.6'
DISCHARGE OVER ROAD @Q100: 250 cfs

AVERAGE LOW ELEVATION OF SUPERSTRUCTURE: 900.2'
VERTICAL CLEARANCE: @ Q50 = 0.7'

SCOUR: Contraction scour calculated at 4.0' @Q100

REQUIRED CHANNEL PROTECTION: Stone Fill, Type III

PERMIT INFORMATION

AVERAGE DAILY FLOW:	30 cfs	DEPTH OR ELEVATION:
ORDINARY LOW WATER:	15 cfs	~1'
ORDINARY HIGH WATER:	330 cfs	~3'

TEMPORARY BRIDGE REQUIREMENTS

STRUCTURE TYPE: None required
CLEAR SPAN (NORMAL TO STREAM):
VERTICAL CLEARANCE ABOVE STREAMBED:
WATERWAY AREA OF FULL OPENING:

ADDITIONAL INFORMATION

TRAFFIC MAINTENANCE NOTES

1. PHASE 1: MAINTAIN ONE-WAY TRAFFIC ON EXISTING STRUCTURE
2. PHASE 2: MAINTAIN ONE-WAY TRAFFIC ON PROPOSED STRUCTURE
3. MAINTENANCE OF PEDESTRIAN FACILITIES IS NOT REQUIRED

DESIGN VALUES

1. DESIGN LIVE LOAD		HL-93
2. FUTURE PAVEMENT	d_p:	0.0 INCH
3. DESIGN SPAN	L:	57.27 FT
4. MIN. MID-SPAN POS. CAMBER @ RELEASE (PRESTRESSED UNITS)	Δ:	1.20 INCH
5. PRESTRESSING STRAND (0.60 INCH DIAMETER - LOW RELAX)	f_y:	270 KSI
6. PRESTRESSED CONCRETE STRENGTH	f'_c:	7.0 KSI
7. PRESTRESSED CONCRETE RELEASE STRENGTH	f'_{ci}:	6.0 KSI
8. SPECIAL PROVISION (HIGH PERFORMANCE CONCRETE, CLASS A)	f'_c:	4.0 KSI
9. SPECIAL PROVISION (HIGH PERFORMANCE CONCRETE, CLASS B)	f'_c:	3.5 KSI
10. CONCRETE HIGH PERFORMANCE, CLASS PSS	f'_c:	4.0 KSI
11. CONCRETE, CLASS C	f'_c:	3.0 KSI
12. REINFORCING STEEL	f_y:	60 KSI
13. STRUCTURAL STEEL AASHTO M270	f_y:	- - -
14. NOMINAL BEARING RESISTANCE OF SOIL	q_n:	4.0 KSF
15. SOIL BEARING RESISTANCE FACTOR (REFER TO AASHTO LRFD)	ϕ:	- - -
16. NOMINAL BEARING RESISTANCE OF ROCK	q_n:	10.0 KSF
17. ROCK BEARING RESISTANCE FACTOR (REFER TO AASHTO LRFD)	ϕ:	- - -
18. PILE RESISTANCE FACTOR	ϕ:	0.65
19. LATERAL PILE DEFLECTION	Δ:	- - -
20. BASIC WIND SPEED	V_{3s}:	- - -
21. MINIMUM GROUND SNOW LOAD	p_g:	- - -
22. SEISMIC DATA — PGA: - - -	S_s:	- - -
	S_1:	- - -
23. NOMINAL AXIAL PILE RESISTANCE		473 KIPS
24. PILE YIELD STRENGTH		50 KSI
25. PILE SIZE		HP 12X84
26. ESTIMATED PILE LENGTH		87 FT

TRAFFIC DATA

YEAR	ADT	DHV	%D	%T	ADTT
2015	2700	320	66	9.1	310
2035	2900	340	66	14.2	510

20 year ESAL for flexible pavement from 2015 to 2035 : 2075000
40 year ESAL for flexible pavement from 2015 to 2055 : 4731000
Design Speed : 50 mph

AS BUILT "REBAR" DETAIL

LEVEL I	LEVEL II	LEVEL III
TYPE:	TYPE:	TYPE:
GRADE:	GRADE:	GRADE:

PROJECT NAME: CALAIS
PROJECT NUMBER: BHF 037-2(II)

FILE NAME: si2bl46pi.dgn
PROJECT LEADER: G. LAROCHE
DESIGNED BY: G. ROKES
PRELIMINARY INFORMATION SHEET

PLOT DATE: 02-JUN-2020
DRAWN BY: G. ROKES
CHECKED BY: G. LAROCHE
SHEET 85 OF 134

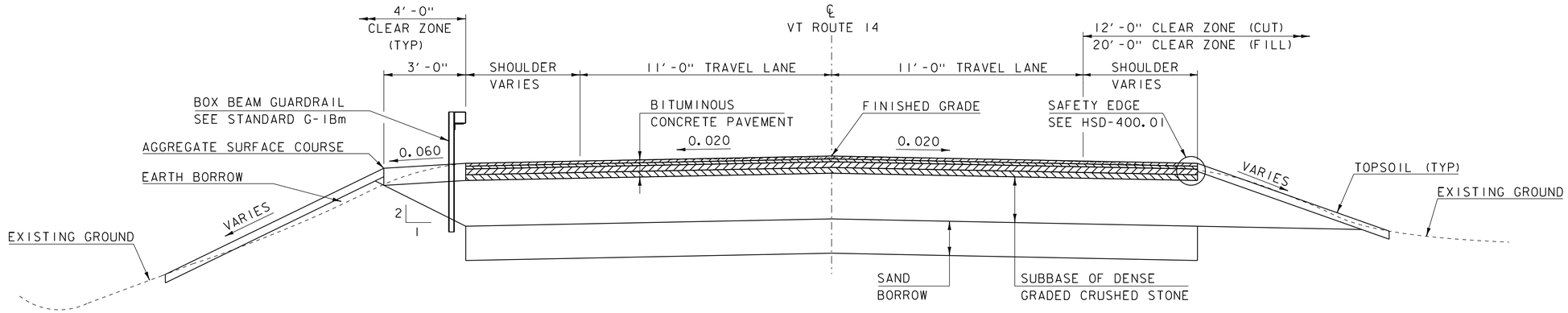

VT 14 TYPICAL SECTION

SCALE 3/8" = 1'-0"

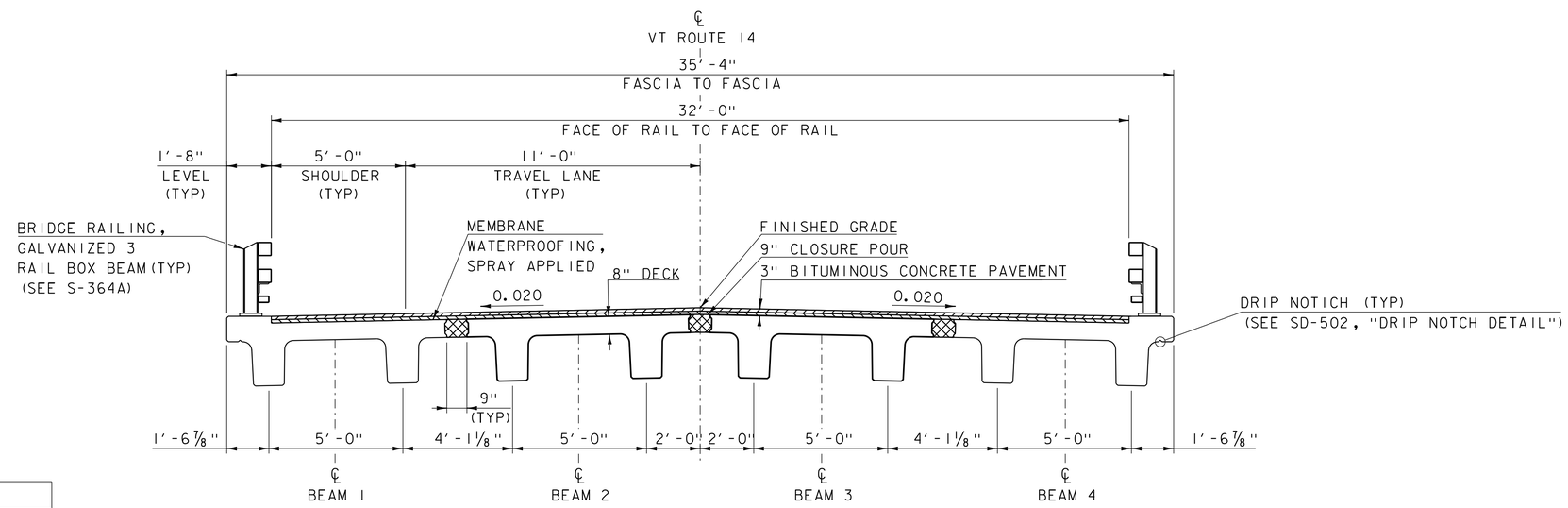

BRIDGE TYPICAL SECTION

SCALE 3/8" = 1'-0"

ROADWAY MATERIAL REQUIREMENTS

	THICKNESS	DESCRIPTION
BINDER	70-28	PERFORMANCE GRADE ASPHALT BINDER
GYRATION	65	DESIGN NUMBER OF GYRATIONS
WEARING COURSE	1 1/2"	406.36 SUPERPAVE BITUMINOUS CONCRETE PAVEMENT (TYPE IVB)
INTERMEDIATE COURSE	1 1/2"	406.36 SUPERPAVE BITUMINOUS CONCRETE PAVEMENT (TYPE IVB)
BASE COURSE #2	2 1/2"	406.35 SUPERPAVE BITUMINOUS CONCRETE PAVEMENT (TYPE IIS)
BASE COURSE #1	2 1/2"	406.35 SUPERPAVE BITUMINOUS CONCRETE PAVEMENT (TYPE IIS)
EMULSIFIED ASPHALT	---	STANDARD SPECIFICATIONS TABLE 406.12A
BUFFER	VARIES	AGGREGATE SURFACE COURSE (MATCH PAVE THICK)
SUBBASE	24"	SUBBASE OF DENSE GRADED CRUSHED STONE
SAND	18"	SAND BORROW
TOPSOIL	4"	TOPSOIL

MATERIAL TOLERANCES
(IF USED ON PROJECT)

SURFACE	
- PAVEMENT (TOTAL THICKNESS)	+/- 1/4"
- AGGREGATE SURFACE COURSE	+/- 1/2"
SUBBASE	+/- 1"
SAND BORROWS	+/- 1"

LEGEND

ITEM 900.608 SPECIAL PROVISION
(HIGH PERFORMANCE CONCRETE, RAPID SET) (FPQ)

PROJECT NAME: CALAIS
PROJECT NUMBER: BHF 037-2(11)

FILE NAME: s12b146typical.dgn
PROJECT LEADER: G. LAROCHE
DESIGNED BY: G. ROKES
TYPICAL SECTIONS 1
PLOT DATE: 02-JUN-2020
DRAWN BY: G. ROKES
CHECKED BY: G. LAROCHE
SHEET 86 OF 134

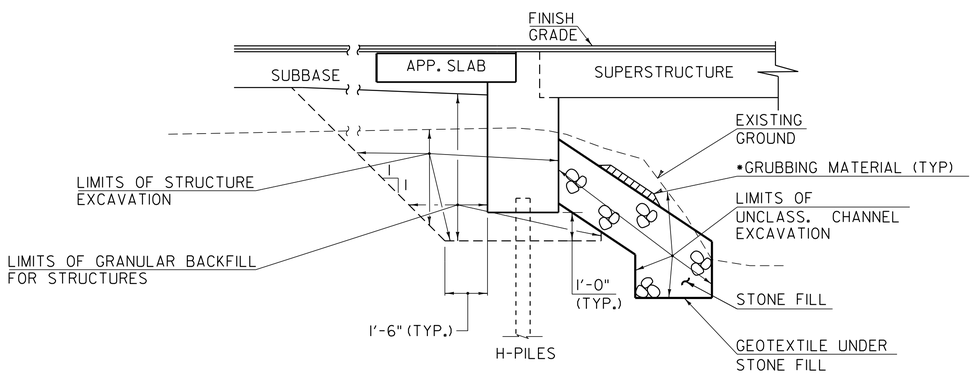

TYPICAL ABUTMENT SECTION

(NOT TO SCALE)

•STONE FILL/GRUBBING SLOPE VARIES, SEE CHANNEL CROSS SECTIONS.

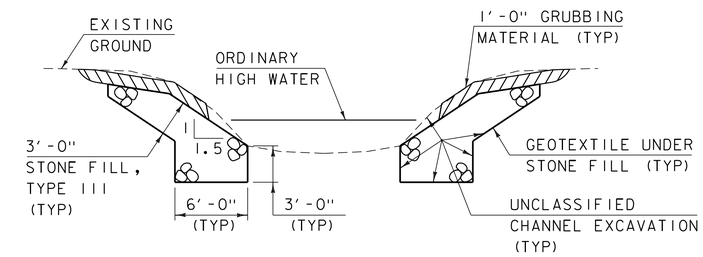

TYPICAL CHANNEL SECTION

(NOT TO SCALE)

1) WHENEVER CHANNEL SLOPE INTERSECTS ROADWAY SUBBASE, GRUBBING MATERIAL SHALL BEGIN AT THE BOTTOM OF SUBBASE.

2) GRUBBING MATERIAL SHALL BE PLACED UNDERNEATH STRUCTURES WHERE THERE IS MORE THAN 6 FEET VERTICALLY FROM ORDINARY HIGH WATER (OHW) TO THE BOTTOM OF SUPERSTRUCTURE AND MORE THAN 6 FEET HORIZONTALLY FROM OHW LINE TO FRONT FACE OF ABUTMENT. THIS MATERIAL SHALL START JUST ABOVE THE OHW ELEVATION AND TERMINATE 3 FEET HORIZONTALLY FROM THE FRONT FACE OF THE ABUTMENT. THIS MATERIAL SHALL NOT BE PLACED IN AREAS THAT WILL SEE CONCENTRATED FLOWS RESULTING FROM SURFACE WATER RUNOFF. GRUBBING MATERIAL MAY BE OMITTED IF LESS THAN 3 FEET IN WIDTH BENEATH A STRUCTURE. SEE THE CHANNEL SECTIONS FOR ADDITIONAL DETAILING.

GENERAL

1. ALL MATERIALS AND CONSTRUCTION SHALL CONFORM TO THE PCI NORTHEAST'S NEXT D STANDARDS DATED JANUARY 2010, WITH 2015 REVISIONS.
2. TEMPORARY MAILBOXES SHALL BE INSTALLED IN ACCORDANCE TO THE UNITED STATES POSTAL SERVICE MAILBOX GUIDELINES. https://www.usps.com/manage/mailboxes.htm

EARTHWORK

3. ITEM 529.15 "REMOVAL OF STRUCTURE" WILL BE USED FOR THE COMPLETE REMOVAL AND DISPOSAL OF THE EXISTING SUPERSTRUCTURE AND SUBSTRUCTURE, INCLUDING ANY PORTION OF THE ABUTMENTS AND WINGWALLS OUTSIDE THE LIMITS OF STRUCTURE EXCAVATION OR UNCLASSIFIED CHANNEL EXCAVATION.
4. ABUTMENTS MAY BE BACKFILLED TO 1'-6" BELOW THE BRIDGE SEAT PRIOR TO ERECTING THE SUPERSTRUCTURE.

H-PILES

5. TO ENSURE THAT THE NOMINAL CAPACITY HAS BEEN ATTAINED AND TO PREVENT THE OVERSTRESSING OF THE PILES DURING DRIVING OPERATIONS, A DYNAMIC PILE TEST SHALL BE CONDUCTED ON THE FIRST PILE DRIVEN AT EACH ABUTMENT. MORE TESTS MAY BE ORDERED BY THE ENGINEER. ADDITIONAL TEST(S) ORDERED BY THE ENGINEER WILL BE PAID FOR AT THE UNIT PRICE BID FOR CONTRACT ITEM 505.45, "DYNAMIC PILE LOADING TEST".
6. THE PILE SHALL HAVE A MINIMUM PENETRATION OF 35 FEET BELOW THE BOTTOM OF PILE CAP.
7. FOR ESTIMATING PURPOSES, THE PILE TIP ELEVATIONS WERE ASSUMED AS SHOWN ON THE BORING LOGS. THE ACTUAL IN-PLACE LENGTHS MAY VARY BASED ON BEDROCK LOCATION.

CONCRETE AND REINFORCING STEEL

8. THE METHOD OF FORMING FOR SUBSEQUENT POURS AFTER PLACING PRECAST/PRESTRESSED SUPERSTRUCTURE UNITS SHALL BE DETERMINED BY THE CONTRACTOR. THE CONTRACTOR IS ENCOURAGED TO WORK WITH THE FABRICATOR IF ADDITIONAL SUPPORTS MAY BE REQUIRED. IN NO CASE SHALL THE CONTRACTOR ATTACH ADDITIONAL FORM OR SCREED SUPPORTS BY DRILLING OR SIMILAR MEANS INTO ANY PRECAST/PRESTRESSED SUPERSTRUCTURE OR SUBSTRUCTURE UNITS.
9. ALL MECHANICAL CONNECTORS ABOVE THE BRIDGE SEAT IN THE SUBSTRUCTURE SHALL BE LEVEL 2, BELOW THE BRIDGE SEAT IN THE SUBSTRUCTURE AND IN THE APPRAOCH SLABS SHALL BE LEVEL 1 (EPOXY COATED). ALL MECHANICAL BAR CONNECTORS SHALL BE PAID FOR UNDER ITEM 507.19 MECHANICAL BAR CONNECTORS.

NEXT D BEAMS

10. NEXT D BEAMS ARE A NON-PROPRIETARY SHAPE DEVELOPED BY PCI NORTHEAST (PCINE). STANDARDIZED SECTION PROPERTIES AND DETAILS MAY BE FOUND AT http://www.pcine.org.
11. ALL LIFTING POINTS IN THE SUPERSTRUCTURE SHALL BE REMOVABLE TO THE MINIMUM CLEAR COVER FOR REINFORCING STEEL SPECIFIED IN THE PLANS. PAYMENT FOR THIS WORK WILL BE INCLUDED IN THE PAYMENT OF ITEM 510.26 PRESTRESSED CONCRETE NEXT D BEAMS.
12. ALL RECESSED LIFTING POINTS AND BLOCKOUTS SHALL BE FILLED WITH A TYPE IV MORTAR PER SUBSECTION 707.03. PAYMENT WILL BE CONSIDERED INCIDENTAL TO ITEM 510.26 PRESTRESSED CONCRETE NEXT D BEAMS.
13. DUE TO STABILITY CONCERNS AT THE ABUTMENTS DURING THE ERECTION OF THE SUPERSTRUCTURE, THE CONTRACTOR SHALL SUBMIT THE ERECTION PLAN A MINIMUM OF 30 CALENDAR DAYS PRIOR TO ERECTION. UNDER NO CIRCUMSTANCES SHALL THE SUPERSTRUCTURE BE ERECTED PRIOR TO HAVING AN ACCEPTED ERECTION PLAN.
14. THE CONTRACTOR SHALL MAINTAIN A MINIMUM CLEARANCE EQUIVALENT TO THE BACKFILL HEIGHT BETWEEN THE ABUTMENT AND THE CRANE MATS DURING ERECTION OF THE SUPERSTRUCTURE. IF THE CONTRACTOR PROPOSES A CLOSER DISTANCE BETWEEN THE ABUTMENT AND THE CRANE MATS THEN THEY SHALL SUBMIT CALCULATIONS STAMPED BY A REGISTERED PROFESSIONAL ENGINEER IN THE STATE OF VERMONT TO THE PROJECT MANAGER FOR APPROVAL. THE CALCULATIONS SHALL SUBSTANTIATE THAT THE PROPOSED CONFIGURATION WILL NOT OVERSTRESS THE PILES OR ROTATE THE ABUTMENT BEYOND 0.01 RADIANS. ALL COSTS ASSOCIATED WITH THIS WORK WILL BE INCLUDED IN THE PAYMENT OF ITEM 510.26, "PRESTRESSED CONCRETE NEXT D BEAMS".
15. NO ADJUSTMENTS TO THE BITUMINOUS WEARING SURFACE ON THE BRIDGE SHALL BE MADE TO ACCOUNT FOR THE DIFFERENCE BETWEEN BEAM CAMBER AND THE THEORETICAL ROADWAY PROFILE. STEEL SHIMS, SPECIFIED ON THE BEARING SHEET, MAY BE UTILIZED TO SHIM THE BEAMS DURING ERECTION AS NECESSARY TO ACCOUNT FOR POTENTIAL DIFFERENTIAL CAMBER OF ADJACENT BEAMS.

LONGITUDINAL JOINTS / ABUTMENT CLOSURE POUR

16. FORMS FOR LONGITUDINAL BEAM JOINTS SHALL BE REMOVABLE AND ABLE TO ACCOMMODATE DIFFERENTIAL CAMBER
17. THE CONCRETE EDGES ALONG THE LONGITUDINAL CLOSURE POURS SHALL BE TREATED TO PROVIDE A ROUGHENED/ EXPOSED AGGREGATE SURFACE. THAT AMPLITUDE OF THE EXPOSED AGGREGATE SHALL BE A MINIMUM OF 1/8" AND BE COMPLETED PRIOR TO ERECTION OF THE BEAMS. THE FABRICATOR SHALL INDICATE THE METHOD USED TO ACHIEVE THIS PROFILE ON THE FABRICATION DRAWINGS AND METHOD USED TO PROTECT THE REINFORCING STEEL.
18. THE LONGITUDINAL JOINTS AND BEAM END CLOSURE POUR SHALL OBTAIN A STRENGTH OF 4,000 PSI PRIOR TO ANY VEHICULAR LOADING.

STATE OF VERMONT
AGENCY OF TRANSPORTATION

QUANTITY SHEET 1

SUMMARY OF ESTIMATED QUANTITIES					TOTALS		DESCRIPTIONS			
ROADWAY	TRAINING	EROSION CONTROL	BRIDGE	FULL C.E. ITEMS	GRAND TOTAL	FINAL	UNIT	ITEMS	ITEM NUMBER	ROUND
1					1		LS	CLEARING AND GRUBBING, INCLUDING INDIVIDUAL TREES AND STUMPS (CALAIS (11))	201.10	
1490					1490		CY	COMMON EXCAVATION	203.15	
			420		420		CY	UNCLASSIFIED CHANNEL EXCAVATION	203.27	
600					600		CY	SAND BORROW	203.31	
18					18		CY	TRENCH EXCAVATION OF EARTH	204.20	
2					2		CY	TRENCH EXCAVATION OF ROCK	204.21	
1					1		CY	TRENCH EXCAVATION OF EARTH, EXPLORATORY (N.A.B.I.)	204.22	
			150		150		CY	STRUCTURE EXCAVATION	204.25	
			110		110		CY	GRANULAR BACKFILL FOR STRUCTURES	204.30	
320					320		SY	COARSE-MILLING, BITUMINOUS PAVEMENT	210.10	
1340					1340		CY	SUBBASE OF DENSE GRADED CRUSHED STONE	301.35	
57					57		CY	AGGREGATE SURFACE COURSE	401.10	
30					30		CWT	EMULSIFIED ASPHALT	404.65	
0.33					0.33		LU	MAT DENSITY PAY ADJUSTMENT (N.A.B.I.)	406.29	
421					421		TON	SUPERPAVE BITUMINOUS CONCRETE PAVEMENT	406.35	
359					359		TON	SUPERPAVE BITUMINOUS CONCRETE PAVEMENT, TYPE IVB	406.36	
0.33					0.33		LU	PRICE ADJUSTMENT, ASPHALT CEMENT (N.A.B.I.)	406.50	
			1		1		LS	FURNISHING EQUIPMENT FOR DRIVING PILING (CALAIS (11))	504.10	
			960		960		LF	STEEL PILING, HP 12 X 84	505.165	
			2		2		EACH	DYNAMIC PILE LOADING TEST	505.45	
			11070		11070		LB	REINFORCING STEEL, LEVEL I (EPOXY)	507.11	
			7560		7560		LB	REINFORCING STEEL, LEVEL II	507.12	
			75		75		EACH	MECHANICAL BAR CONNECTOR (EPOXY (#5))	507.19	
			18		18		EACH	MECHANICAL BAR CONNECTOR (LEVEL 2 (#5))	507.19	
			231		231		LF	PRESTRESSED CONCRETE NEXT D BEAMS	510.26	
			10		10		GAL	WATER REPELLENT, SILANE	514.10	
			69		69		LF	BRIDGE EXPANSION JOINT, ASPHALTIC PLUG	516.10	
			224		224		SY	MEMBRANE WATERPROOFING, SPRAY APPLIED	519.10	
			69		69		LF	JOINT SEALER, HOT POURED	524.11	
			126		126		LF	BRIDGE RAILING, GALVANIZED 3 RAIL BOX BEAM	525.335	
			1		1		EACH	REMOVAL OF STRUCTURE (1040 SF EST)(CALAIS(11))	529.15	
			16		16		EACH	BEARING DEVICE ASSEMBLY, STEEL REINFORCED ELASTOMERIC PAD	531.17	
38					38		LF	15" CPEP	601.0910	
1					1		EACH	15" CPEPES	601.7010	
4					4		CY	STONE FILL, TYPE II	613.11	
			280		280		CY	STONE FILL, TYPE III	613.12	
2					2		EACH	REMOVE AND RESET MAILBOX, SINGLE SUPPORT	617.10	
243					243		LF	BOX BEAM GUARDRAIL	621.30	
3					3		EACH	MANUFACTURED TERMINAL SECTION, TANGENT (BOX BEAM)	621.51	
4					4		EACH	GUARDRAIL APPROACH SECTION, GALVANIZED 3 RAIL BOX BEAM	621.725	

DETAILED SUMMARY OF QUANTITIES

QUANTITIES	UNIT	ITEMS
		EARTHWORKS SUMMARY
		FILL AVAILABLE
894	CY	COMMON EXCAVATION (1490 x 0.6)
126	CY	UNCLASSIFIED CHANNEL EXCAVATION (420 x 0.3)
5	CY	TRENCH EXCAVATION (18 x 0.3)
45	CY	STRUCTURE EXCAVATION (150 x 0.3)
0	CY	ROUNDING
1070	**CY**	**TOTAL FILL AVAILABLE**
		FILL REQUIRED
	CY	FACTORED FILL (90x 1.15)
	CY	ROUNDING
0	**CY**	**TOTAL FILL REQUIRED**
		SUPERPAVE BITUMINOUS CONCRETE PAVEMENT
421	TON	BASE COURSE
		SUPERPAVE BITUMINOUS CONCRETE PAVEMENT, TYPE IV
172.6	TON	INTERMEDIATE COURSE
186.4	TON	WEARING COURSE

PROJECT NAME: CALAIS
PROJECT NUMBER: BHF 037-2(11)

FILE NAME: s12b146qty.dgn
PROJECT LEADER: G. LAROCHE
DESIGNED BY: A. MANN
QUANTITY SHEET 1

PLOT DATE: 02-JUN-2020
DRAWN BY: S. COLEY
CHECKED BY: G. LAROCHE
SHEET 89 OF 134

STATE OF VERMONT
AGENCY OF TRANSPORTATION

QUANTITY SHEET 2

SUMMARY OF ESTIMATED QUANTITIES					TOTALS		DESCRIPTIONS			
ROADWAY	TRAINING	EROSION CONTROL	BRIDGE	FULL C.E. ITEMS	GRAND TOTAL	FINAL	UNIT	ITEMS	ITEM NUMBER	ROUND
170					170		LF	REMOVAL AND DISPOSAL OF GUARDRAIL	621.80	
120					120		HR	UNIFORMED TRAFFIC OFFICERS	630.10	
960					960		HR	FLAGGERS	630.15	
				0.33	0.33		LS	FIELD OFFICE, ENGINEERS	631.10	
				0.33	0.33		LS	TESTING EQUIPMENT, CONCRETE	631.16	
				0.33	0.33		LS	TESTING EQUIPMENT, BITUMINOUS	631.17	
				1000	1000		DL	FIELD OFFICE COMMUNICATIONS (N.A.B.I.)	631.26	
4					4		EACH	CPM SCHEDULE	633.10	
	173				173		HR	EMPLOYEE TRAINEESHIP	634.10	
0.33					0.33		LS	MOBILIZATION/DEMOBILIZATION	635.11	
1					1		LS	TRAFFIC CONTROL, ALL-INCLUSIVE (CALAIS (11))	641.11	
1250					1250		LF	4 INCH WHITE LINE, WATERBORNE PAINT	646.201	
1250					1250		LF	4 INCH YELLOW LINE, WATERBORNE PAINT	646.2111	
			380		380		SY	GEOTEXTILE UNDER STONE FILL	649.31	
		160			160		SY	GEOTEXTILE FOR FILTER CURTAIN	649.61	
		30			30		LB	SEED	651.15	
		240			240		LB	FERTILIZER	651.18	
		1			1		TON	AGRICULTURAL LIMESTONE	651.20	
		145			145		CY	TOPSOIL	651.35	
		100			100		SY	GRUBBING MATERIAL	651.40	
		1			1		LS	EPSC PLAN (CALAIS (11))	653.01	
		40			40		HR	MONITORING EPSC PLAN	653.02	
		1			1		LU	MAINTENANCE OF EPSC PLAN (N.A.B.I.) (CALAIS (11))	653.03	
		1			1		TON	HAY MULCH	653.10	
		500			500		SY	ROLLED EROSION CONTROL PRODUCT, TYPE I	653.20	
		36			36		CY	STABILIZED CONSTRUCTION ENTRANCE	653.35	
		5			5		CY	INLET PROTECTION DEVICE, TYPE III	653.42	
		1120			1120		LF	SILT FENCE, TYPE II	653.476	
		535			535		LF	BARRIER FENCE	653.50	
		635			635		LF	PROJECT DEMARCATION FENCE	653.55	
		10			10		LF	EROSION LOG	653.60	
0.84					0.84		SF	TRAFFIC SIGN, TYPE A	675.20	
35					35		LF	SQUARE TUBE SIGN POST AND ANCHOR	675.341	
3					3		EACH	REMOVING SIGNS	675.50	
1					1		EACH	RESETTING SIGNS	675.60	
4					4		EACH	DELINEATOR WITH STEEL POST	676.10	
1					1		EACH	TEMPORARY TRAFFIC SIGNAL SYSTEM (CALAIS (11))	678.40	
0.33					0.33		LU	PRICE ADJUSTMENT, FUEL (N.A.B.I.)	690.50	
			134		134		CY	SPECIAL PROVISION (HIGH PERFORMANCE CONCRETE, CLASS B)	900.608	
			20		20		CY	SPECIAL PROVISION (HIGH PERFORMANCE CONCRETE, RAPID SET)	900.608	

DETAILED SUMMARY OF QUANTITIES		
QUANTITIES	UNIT	ITEMS

PROJECT NAME: CALAIS
PROJECT NUMBER: BHF 037-2(11)

FILE NAME: s12b146qty.dgn
PROJECT LEADER: G. LAROCHE
DESIGNED BY: A. MANN
QUANTITY SHEET 2

PLOT DATE: 02-JUN-2020
DRAWN BY: S. COLEY
CHECKED BY: G. LAROCHE
SHEET 90 OF 134

STATE OF VERMONT
AGENCY OF TRANSPORTATION

QUANTITY SHEET 3

SUMMARY OF ESTIMATED QUANTITIES										TOTALS		DESCRIPTIONS				DETAILED SUMMARY OF QUANTITIES		
					ROADWAY	TRAINING	EROSION CONTROL	BRIDGE	FULL C.E. ITEMS	GRAND TOTAL	FINAL	UNIT	ITEMS	ITEM NUMBER	ROUND	QUANTITIES	UNIT	ITEMS
					1					1		EACH	SPECIAL PROVISION (BOX BEAM GUARDRAIL TERMINAL, TYPE IIA)	900.620				

PROJECT NAME: CALAIS
PROJECT NUMBER: BHF 037-2(11)

FILE NAME: s12b146qty.dgn
PROJECT LEADER: G. LAROCHE
DESIGNED BY: A. MANN
QUANTITY SHEET 3

PLOT DATE: 02-JUN-2020
DRAWN BY: S. COLEY
CHECKED BY: G. LAROCHE
SHEET 91 OF 134

STATE OF VERMONT
AGENCY OF TRANSPORTATION

BRIDGE QUANTITY SHEET 1

SUMMARY OF BRIDGE QUANTITIES					TOTALS	DESCRIPTIONS			DETAILED SUMMARY OF QUANTITIES		
CHANNEL	DECK	APP SLAB 1	APP SLAB 2	ABUT 1	ABUT 2	BRIDGE TOTAL	UNIT	ITEMS	ITEM NUMBER	QUANTITIES	UNIT	ITEMS
420						420	CY	UNCLASSIFIED CHANNEL EXCAVATION	203.27			
				74	76	150	CY	STRUCTURE EXCAVATION	204.25			
				48	62	110	CY	GRANULAR BACKFILL FOR STRUCTURES	204.30			
				1		1	LS	FURNISHING EQUIPMENT FOR DRIVING PILING (CALAIS (11))	504.10			
				437	523	960	LF	STEEL PILING, HP 12 X 84	505.165			
				1	1	2	EACH	DYNAMIC PILE LOADING TEST	505.45			
		3744	3650	1764	1912	11070	LB	REINFORCING STEEL, LEVEL I (EPOXY)	507.11			
	510			3515	3535	7560	LB	REINFORCING STEEL, LEVEL II	507.12			
		21	21	16	17	75	EACH	MECHANICAL BAR CONNECTOR (EPOXY (#5))	507.19			
				9	9	18	EACH	MECHANICAL BAR CONNECTOR (LEVEL 2 (#5))	507.19			
	231					231	LF	PRESTRESSED CONCRETE NEXT D BEAMS	510.26			
	2			4	4	10	GAL	WATER REPELLENT, SILANE	514.10			
				35	34	69	LF	BRIDGE EXPANSION JOINT, ASPHALTIC PLUG	516.10			
	224					224	SY	MEMBRANE WATERPROOFING, SPRAY APPLIED	519.10			
				35	34	69	LF	JOINT SEALER, HOT POURED	524.11			
				63	63	126	LF	BRIDGE RAILING, GALVANIZED 3 RAIL BOX BEAM	525.335			
	1					1	EACH	REMOVAL OF STRUCTURE (1040 SF EST)(CALAIS(11))	529.15			
				8	8	16	EACH	BEARING DEVICE ASSEMBLY, STEEL REINFORCED ELASTOMERIC PAD	531.17			
				145	135	280	CY	STONE FILL, TYPE III	613.12			
				195	185	380	SY	GEOTEXTILE UNDER STONE FILL	649.31			
		30	30	36	38	134	CY	SPECIAL PROVISION (HIGH PERFORMANCE CONCRETE, CLASS B)	900.608			
	3.4			8.3	8.3	20	CY	SPECIAL PROVISION (HIGH PERFORMANCE CONCRETE, RAPID SET)	900.608			

PROJECT NAME: CALAIS
PROJECT NUMBER: BHF 037-2(11)

FILE NAME: s12b146qty.dgn
PROJECT LEADER: G. LAROCHE
DESIGNED BY: A. MANN
BRIDGE QUANTITY SHEET

PLOT DATE: 02-JUN-2020
DRAWN BY: S. COLEY
CHECKED BY: G. LAROCHE
SHEET 92 OF 134

GPS CONTROL POINTS

HVCTRL #1

HAP AZ MK
NORTH = 686146.987
EAST = 1661704.252
ELEV. = 893.670

GENERAL LOCATION, CALAIS, VT. TO REACH FROM THE INTERSECTION OF VT ROUTE 14 AND VT ROUTE 214 IN NORTH MONTPELIER GO NORTH ALONG VT ROUTE 14 FOR 4.9 MI (7.9 KM) TO THE INTERSECTION OF MOSCOW WOODS ROAD LEFT IN EAST CALAIS VILLAGE. CONTINUE STRAIGHT AHEAD AND GO NORTH ALONG VT ROUTE 14 FOR 1.3 MI (2.1 KM) TO THE MARK ON THE LEFT. IT IS ABOUT 0.2 MI (0.3 KM) NORTH OF THE INTERSECTION OF VT ROUTE 14 AND BALENTINE ROAD. THE MARK IS SET 5 CM BELOW GROUND SURFACE IN THE TOP OF A 30 CM DIAMETER CONCRETE MONUMENT POURED 1.5 M (4.9 FT) DEEP. IT IS 8.6 M (28.2 FT) WEST OF AND ABOUT 1.5 M (4.9 FT) LOWER THAN THE CENTERLINE OF VT ROUTE 14, 21.4 M (70.2 FT) WEST OF POLE NO.42, 54.4 M (178.5 FT) SOUTHWEST OF POLE NO.43, AND 0.3 M (1.0 FT) EAST OF A FIBERGLASS WITNESS POST.

HVCTRL #2

HAP
NORTH = 688019.608
EAST = 1662266.525
ELEV. = 926.050

GENERAL LOCATION, CALAIS, VT. OWNERSHIP, HAP AND FLO HARTMAN, ROUTE 14, EAST CALAIS, VT.05650. PHONE 802-456-7467. TO REACH FROM THE INTERSECTION OF VT ROUTE 14 AND VT ROUTE 214 IN NORTH MONTPELIER GO NORTH ALONG VT ROUTE 14 FOR 4.9 MI (7.9 KM) TO THE INTERSECTION OF MOSCOW WOODS ROAD LEFT IN EAST CALAIS VILLAGE. CONTINUE STRAIGHT AHEAD AND GO NORTH ALONG VT ROUTE 14 FOR 1.7 MI (2.7 KM) TO THE MARK ON THE LEFT ON TOP OF A SMALL KNOLL. THE MARK IS SET 3 CM BELOW GROUND SURFACE IN THE TOP OF A 30 CM DIAMETER CONCRETE MONUMENT POURED 1.5 M (4.9 FT) DEEP. IT IS 14.7 M (48.2 FT) WEST OF AND ABOUT 3 M (9.8 FT) HIGHER THAN THE CENTERLINE OF VT ROUTE 14, 30.8 M (101.0 FT) NORTH OF POLE NO.52, 26.8 M (87.9 FT) SOUTH OF POLE NO.1/53, AND 0.3 M (1.0 FT) EAST OF A FIBERGLASS WITNESS POST.

TRAVERSE TIES

HVCTRL #3

NORTH = 686689.546
EAST = 1661859.106
ELEV. = 899.626

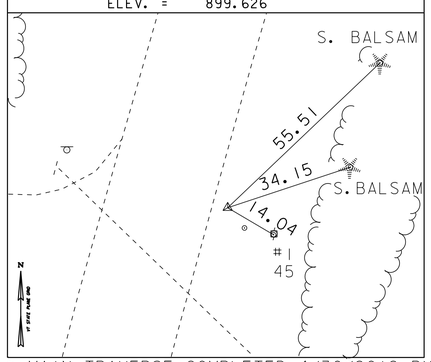

HVCTRL #4

NORTH = 687247.714
EAST = 1661991.095
ELEV. = 903.572

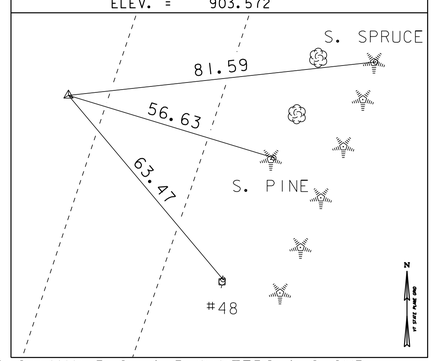

NORTH =	
EAST =	
ELEV. =	

NORTH =	
EAST =	
ELEV. =	

NORTH =	
EAST =	
ELEV. =	

* MAIN TRAVERSE COMPLETED 4/30/2012 BY R.GILMAN P.C. & P.WINTERS & C.CYR

ALIGNMENT TIES

NORTH =	
EAST =	
ELEV. =	

NORTH =	
EAST =	
ELEV. =	

NORTH =	
EAST =	
ELEV. =	

NORTH =	
EAST =	
ELEV. =	

NORTH =	
EAST =	
ELEV. =	

DATUM

VERTICAL	NAVD 88
HORIZONTAL	NAD 83 (92)
ADJUSTMENT	NONE

PROJECT NAME: CALAIS
PROJECT NUMBER: BHF 037-2(11)

FILE NAME: s12b146ti.dgn
PROJECT LEADER: G. LAROCHE
DESIGNED BY: F. BARROWS
TIE SHEET

PLOT DATE: 02-JUN-2020
DRAWN BY: R. BULLOCK
CHECKED BY: F. BARROWS
SHEET 93 OF 134

MAINLINE STATIONING											
POINT		DISTANCE	NORTHING	EASTING							
ID	BEARING	(FEET)	(Y)	(X)	PC	PI	PT	DELTA	R	L	T
1	N 12°34'01.26" E	41.09'	686500.5011	1661794.328		331+75.00					
	N 16°19'12.68" E	121.62'	686639.7393	1661825.368	332+16.09		334+19.15	3°45'11.41"	3099.99'	203.07'	101.57'
	N 18°20'43.56" E	450.18'	686917.6075	1661906.728	334+39.20		337+75.00	2°01'30.88"	9500.00'	335.80'	167.92'
7			687344.9034	1662048.419		340+57.26					

CURVE DATA					
NO.	RADIUS	DELTA	LENGTH	TANGENT	ALIGNMENT
C1	3099.99'	3°45'11.41"	203.07'	101.57'	VT14graphics2
C2	9500.00'	2°01'30.88"	335.80'	167.92'	VT14graphics2

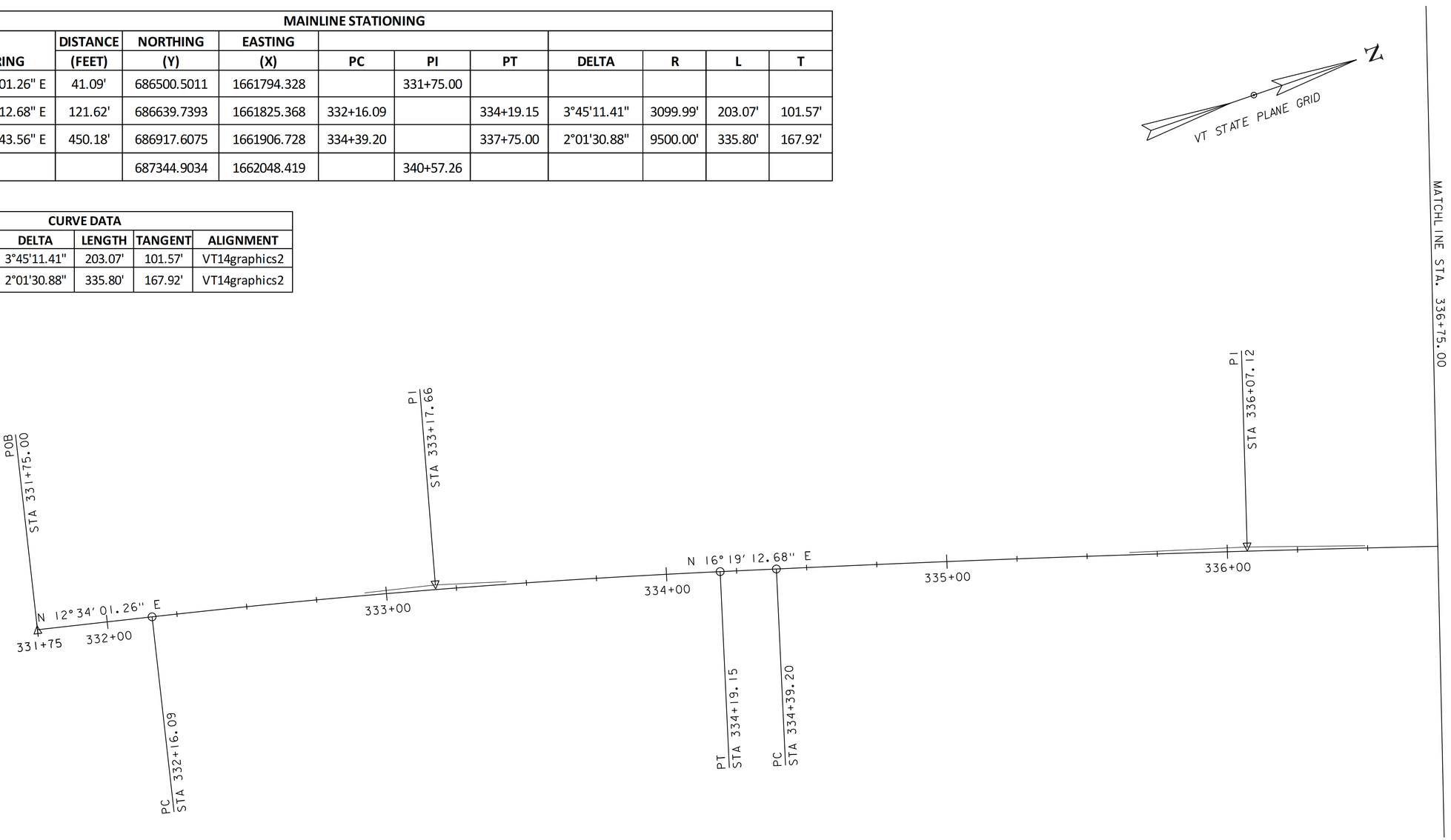

SCALE 1" = 20'-0"
20 0 20

PROJECT NAME: CALAIS	
PROJECT NUMBER: BHF 037-2(11)	
FILE NAME: s12b146align.dgn	PLOT DATE: 02-JUN-2020
PROJECT LEADER: G. LAROCHE	DRAWN BY: G. ROKES
DESIGNED BY: G. ROKES	CHECKED BY: G. LAROCHE
ALIGNMENT SHEET 1	SHEET 94 OF 134

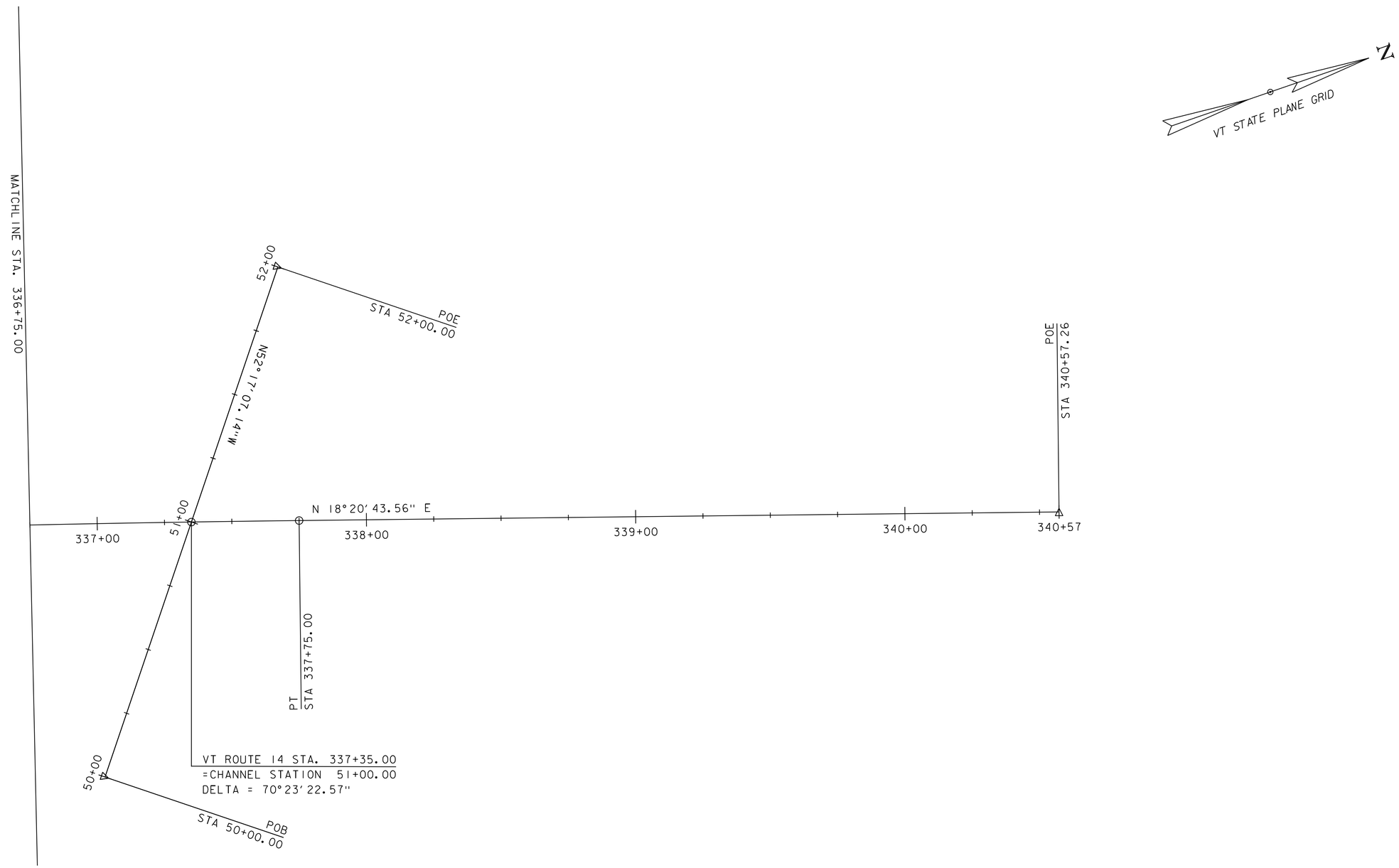

CHANNEL STATIONING											
POINT		DISTANCE	NORTHING	EASTING							
ID	BEARING	(FEET)	(Y)	(X)	PC	PI	PT	DELTA	R	L	T
5	N 52°17'07.14" E	200.00'	686977.824	1662026.176		50+00.00					
3			687100.1699	1661867.963		52+00.00					

SCALE 1" = 20'-0"
20 0 20

PROJECT NAME: CALAIS
PROJECT NUMBER: BHF 037-2(11)

FILE NAME: s12b146align.dgn
PROJECT LEADER: G. LAROCHE
DESIGNED BY: G. ROKES
ALIGNMENT SHEET 2

PLOT DATE: 02-JUN-2020
DRAWN BY: G. ROKES
CHECKED BY: G. LAROCHE
SHEET 95 OF 134

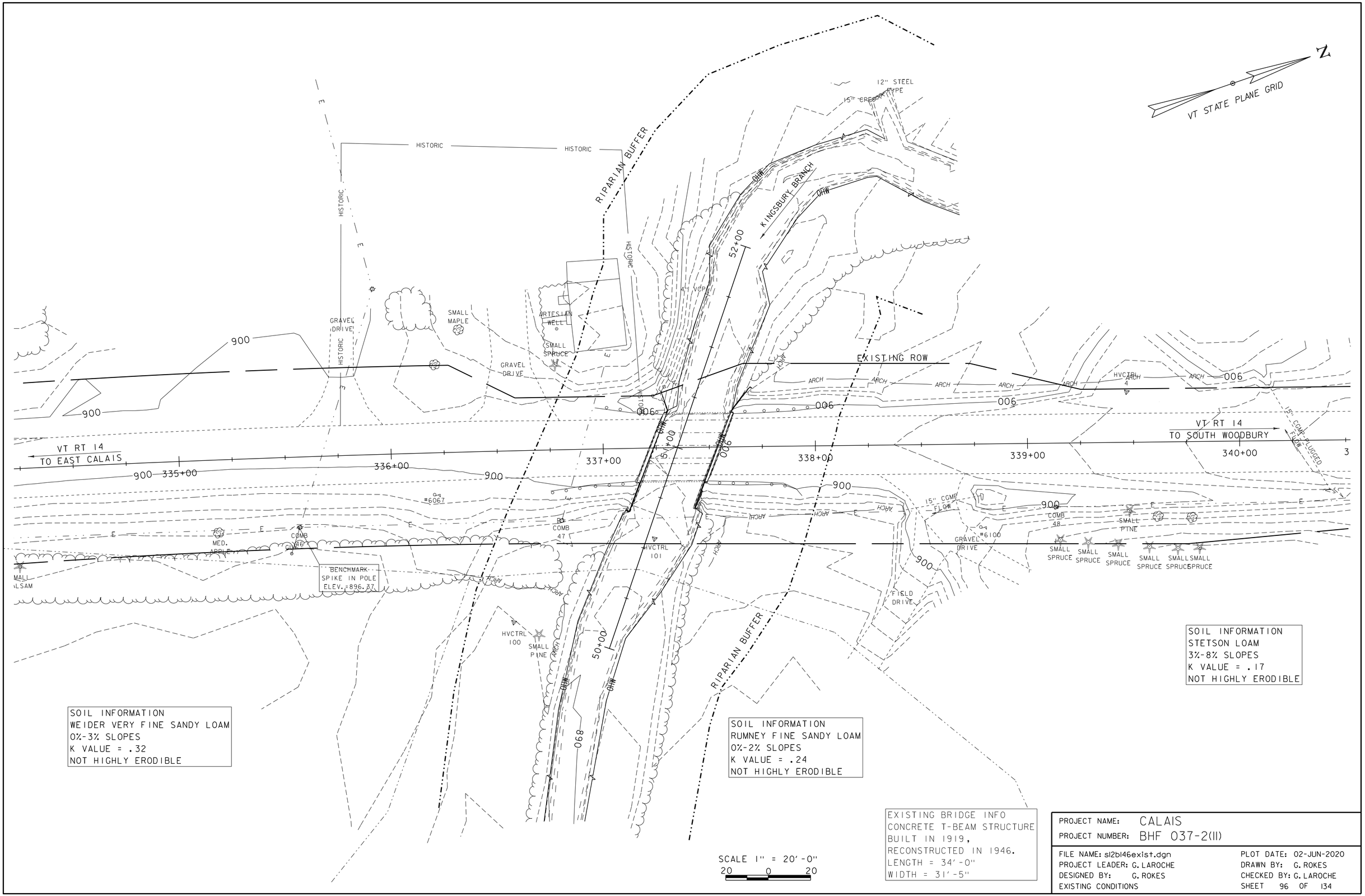
VT STATE PLANE GRID
N
12" STEEL
15" CREEK PIPE
HISTORIC
HISTORIC
RIPARIAN BUFFER
KINGSBURY BRANCH
OHW
52+00
4' VCP
GRAVEL DRIVE
SMALL MAPLE
ARTESIAN WELL
SMALL SPRUCE
GRAVEL DRIVE
EXISTING ROW
ARCH
HVCTRL 4
006
900
VT RT 14
TO EAST CALAIS
VT RT 14
TO SOUTH WOODBURY
335+00
336+00
337+00
338+00
339+00
340+00
15" CMP FLOW
15" CMP PLUGGED FLOW
#6067
BC COMB 47
HVCTRL 101
15" CMP FLOW
#6100
COMB 48
SMALL PINE
SMALL SPRUCE
MED. APPLE
COMB 46
BENCHMARK
SPIKE IN POLE
ELEV.=896.37
FIELD DRIVE
HVCTRL 100
SMALL PINE
50+00
068
RIPARIAN BUFFER
SOIL INFORMATION
STETSON LOAM
3%-8% SLOPES
K VALUE = .17
NOT HIGHLY ERODIBLE
SOIL INFORMATION
WEIDER VERY FINE SANDY LOAM
0%-3% SLOPES
K VALUE = .32
NOT HIGHLY ERODIBLE
SOIL INFORMATION
RUMNEY FINE SANDY LOAM
0%-2% SLOPES
K VALUE = .24
NOT HIGHLY ERODIBLE
SCALE 1" = 20'-0"
20 0 20
EXISTING BRIDGE INFO
CONCRETE T-BEAM STRUCTURE
BUILT IN 1919,
RECONSTRUCTED IN 1946.
LENGTH = 34'-0"
WIDTH = 31'-5"
PROJECT NAME: CALAIS
PROJECT NUMBER: BHF 037-2(11)
FILE NAME: s12b146exist.dgn
PROJECT LEADER: G. LAROCHE
DESIGNED BY: G. ROKES
EXISTING CONDITIONS
PLOT DATE: 02-JUN-2020
DRAWN BY: G. ROKES
CHECKED BY: G. LAROCHE
SHEET 96 OF 134

COARSE-MILLING, BITUMINOUS PAVEMENT
STA. 334+25.0 - 334+75.0
STA. 340+00.0 - 340+50.0

4 INCH YELLOW LINE,
WATERBORNE PAINT (DOUBLE)
STA. 334+25.0 - 340+50.0

4 INCH WHITE LINE,
WATERBORNE PAINT
STA. 334+25.0 - 340+50.0 RT
STA. 334+25.0 - 340+50.0 LT

CONSTRUCT 5'-0" PAVED APRON
STA. 335+78.0 LT
STA. 338+53.0 RT

REMOVE AND RESET MAILBOX, SINGLE SUPPORT
STA. 335+40.0 RT (RESET)
STA. 336+19.9 RT (REMOVE)
STA. 338+77.5 RT (REMOVE & RESET)

CONSTRUCT GRAVEL DRIVE
STA. 335+78.0 LT
STA. 338+53.0 RT

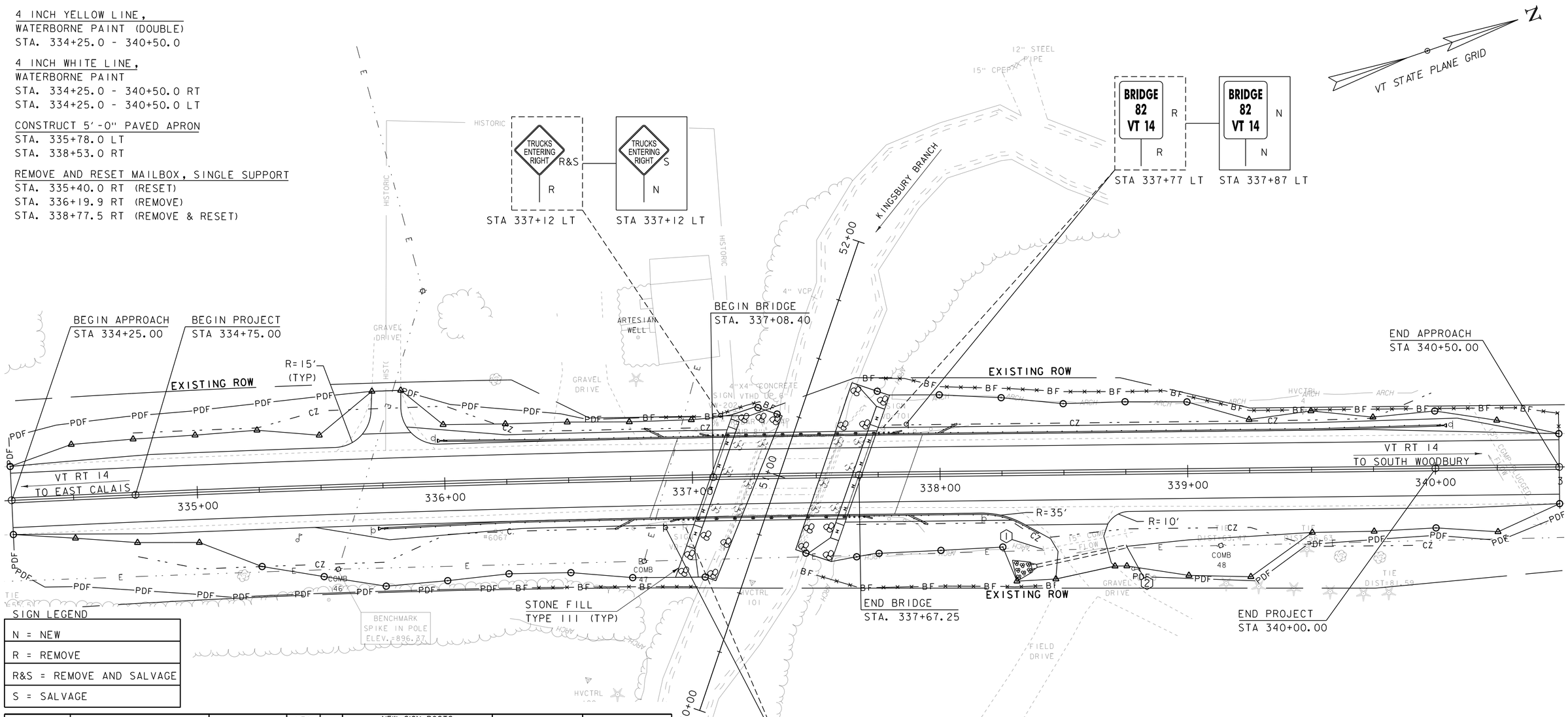

SIGN LEGEND

N = NEW
R = REMOVE
R&S = REMOVE AND SALVAGE
S = SALVAGE

MILEMARKER, STATION, OR SIGN NUMBER	SIGN LEGEND	SIGN DIMENSIONS WIDTH (in)	SIGN DIMENSIONS HEIGHT (in)	NEW SIGN "A"	EXIST POST RETAIN	EXIST POST SALVAGE	NEW SIGN POSTS NO. OF POSTS	SQUARE STEEL (in) 1.75 lb/ft 1.88	2.0 lb/ft 2.42	2.5 lb/ft 3.35	ANCHOR	SLEEVE	REMARKS	SIGN DETAIL DETAIL ON SHEET NUMBER	SIGN DETAIL STD. SHEET NUMBER
STA 336+89 RT	BRIDGE 82 VT 14	6	10	0.42			1	10					VD-701		T-42
STA 337+12 RT	TRUCKS ENTERING RIGHT	30	30				1		15				VW-202		T-81
236+83 LT	BRIDGE 82 VT 14	6	10	0.42			1	10					VD-701		T-42
FINAL POST LENGTHS ARE TO BE DETERMINED IN THE FIELD. POST SIZES ARE COMPUTED BASED ON INFORMATION FURNISHED ON THE STANDARD SHEETS AND THE VTRANS "SIGN POST DESIGN GUIDELINE."								FT 20	FT 15	FT		EA			
		TOTALS		SF .84				FT 35					SHS = STANDARD HIGHWAY SIGNS (MUTCD)		

DRAINAGE NOTES

(1) STA 338+41.11 RT 30.87 - STA 338+77.54 RT 24.38
REMOVE EXISTING HEADWALLS AND 15" CSP

(2) STA 338+36.44 RT 39.18 - STA 338+75.00 RT 37.16
CONSTRUCT PIPE END SECTION
SEE CROSS SECTION FOR INVERTS
CONSTRUCT 37 LF 15" CPEP
7'X8' 8" STONE PAD TYPE II AT OUTLET

EXISTING BRIDGE INFO
CONCRETE T-BEAM STRUCTURE
BUILT IN 1919,
RECONSTRUCTED IN 1946.
LENGTH = 34'-0"
WIDTH = 31'-5"

SCALE 1" = 20'-0"
20 0 20

PROJECT NAME: CALAIS
PROJECT NUMBER: BHF 037-2(11)

FILE NAME: Structures/sl2bl46bdr.dgn
PROJECT LEADER: G. LAROCHE
DESIGNED BY: G. ROKES
LAYOUT
PLOT DATE: 02-JUN-2020
DRAWN BY: G. ROKES
CHECKED BY: G. LAROCHE
SHEET 97 OF 134

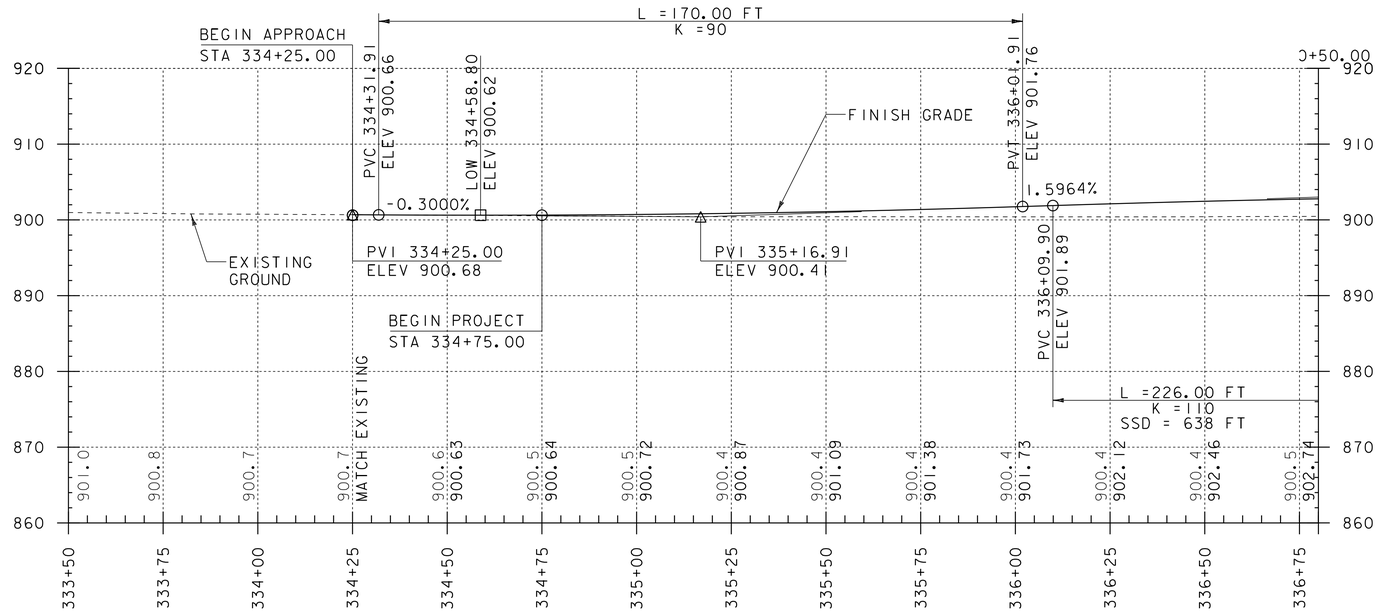

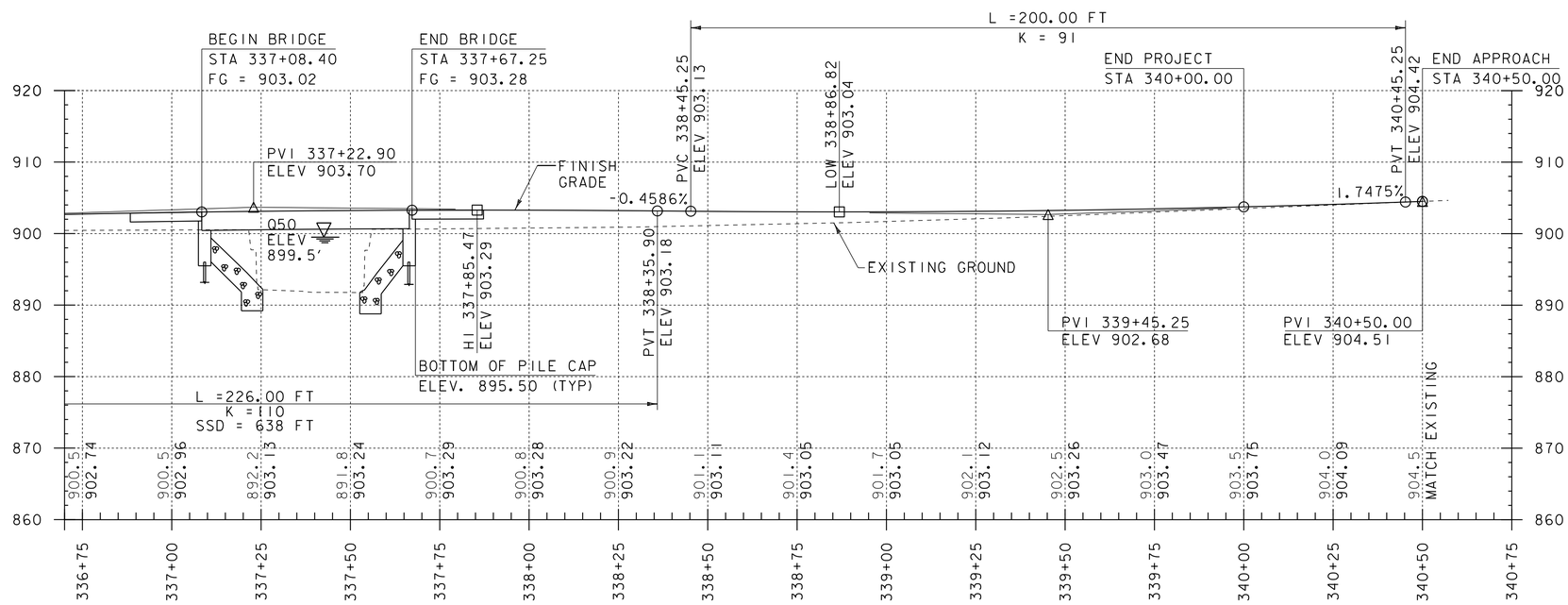

NOTE:

GRADES SHOWN TO THE NEAREST TENTH ARE EXISTING GROUND ALONG ℄

GRADES SHOWN TO THE NEAREST HUNDREDTH ARE FINISH GRADE ALONG ℄

PROFILE ALONG CENTERLINE VT ROUTE 14

HOR. SCALE 1"=20'-0"
VER. SCALE 1"=10'-0"

PROJECT NAME: CALAIS	
PROJECT NUMBER: BHF 037-2(11)	
FILE NAME: s12b146profile.dgn	PLOT DATE: 02-JUN-2020
PROJECT LEADER: G. LAROCHE	DRAWN BY: G. ROKES
DESIGNED BY: G. ROKES	CHECKED BY: G. LAROCHE
PROFILE SHEET	SHEET 98 OF 134

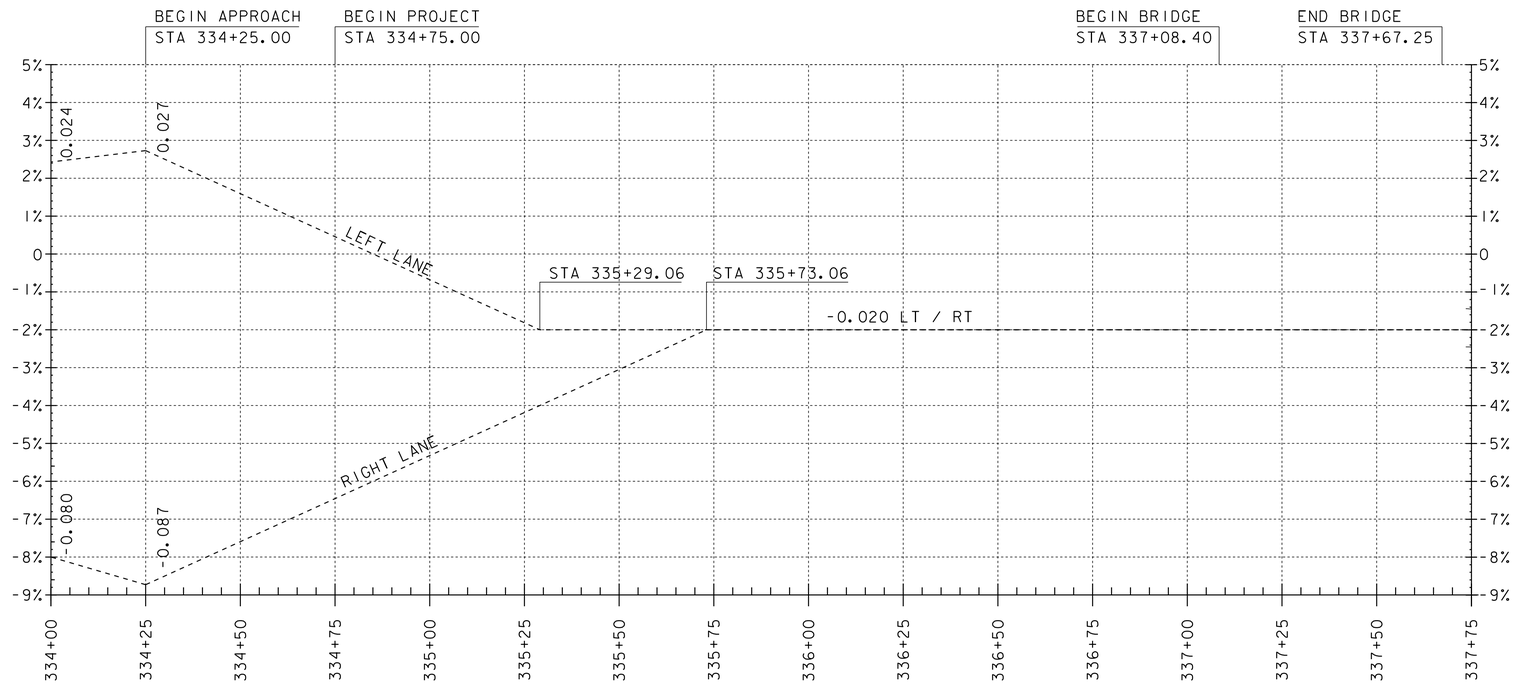

BANKING DIAGRAM

SCALE: HORIZONTAL 1"=20'-0"
NO VERTICAL SCALE

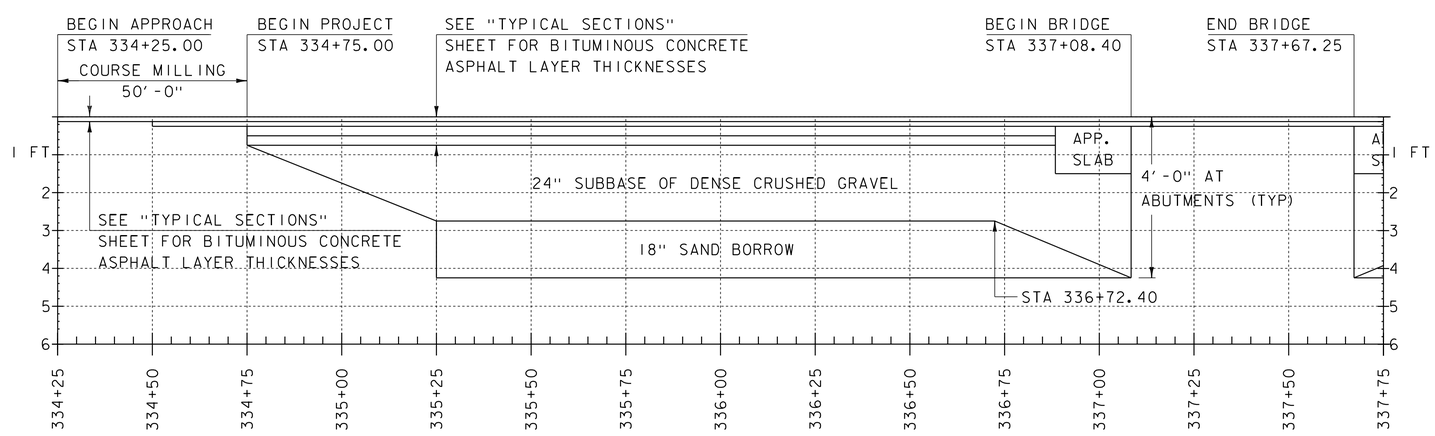

MATERIAL TRANSITION

(NOT TO SCALE)

PROJECT NAME: CALAIS	
PROJECT NUMBER: BHF 037-2(11)	
FILE NAME: s12b146xs2.dgn	PLOT DATE: 02-JUN-2020
PROJECT LEADER: G. LAROCHE	DRAWN BY: G. ROKES
DESIGNED BY: G. ROKES	CHECKED BY: G. LAROCHE
BANKING & MATERIAL TRANSITION 1	SHEET 99 OF 134

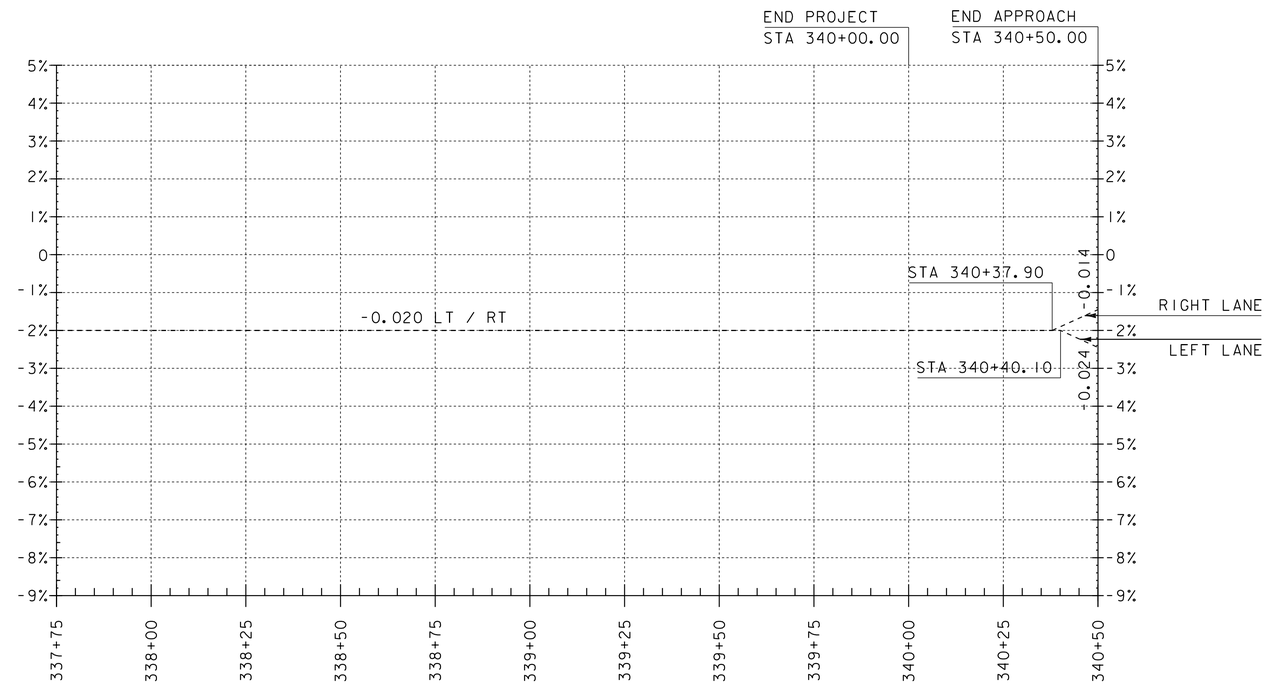

BANKING DIAGRAM

SCALE: HORIZONTAL 1"=20'-0"
NO VERTICAL SCALE

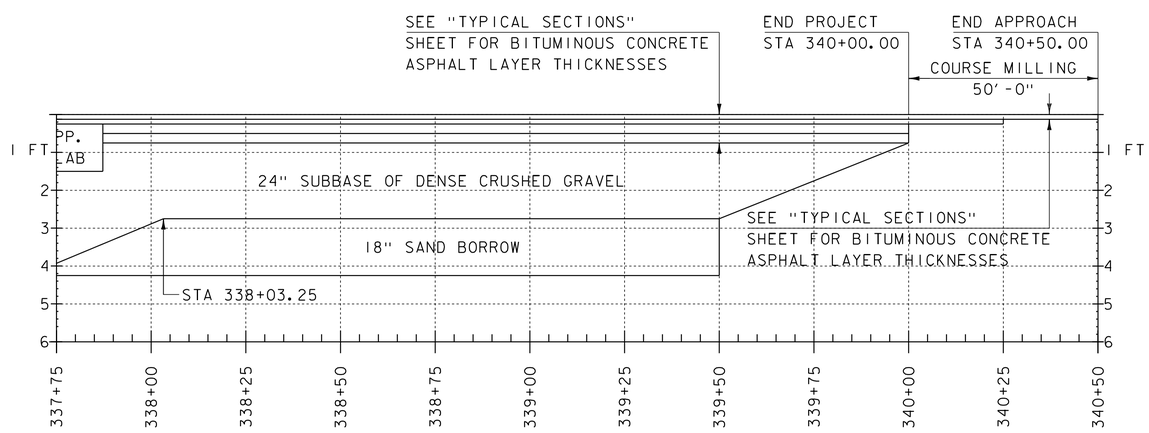

MATERIAL TRANSITION

(NOT TO SCALE)

PROJECT NAME: CALAIS	
PROJECT NUMBER: BHF 037-2(11)	
FILE NAME: s12b146xs2.dgn	PLOT DATE: 02-JUN-2020
PROJECT LEADER: G. LAROCHE	DRAWN BY: G. ROKES
DESIGNED BY: G. ROKES	CHECKED BY: G. LAROCHE
BANKING & MATERIAL TRANSITION 2	SHEET 100 OF 134

NOTES

1. PHASE 1 AND 2 REFLECTS ONE-WAY, ALTERNATING TRAFFIC CONTROLLED BY TEMPORARY TRAFFIC SIGNALS.

2. PHASING TYPICAL SECTIONS ARE CONCEPTUAL ONLY. PHASING TYPICAL SECTIONS ARE INTENDED TO COMMUNICATE BASIC SITE CONDITIONS THAT INCLUDE LANE WIDTHS AND SHOULDER WIDTHS.

3. TEMPORARY BARRIER IN THE PLAN SHALL BE IN ACCORDANCE WITH SECTION 621.

4. SUPPORT OF EXCAVATION LOCATED WITHIN THE DEFLECTION DISTANCE OF THE TRAFFIC BARRIER SHALL BE DESIGNED TO WITHSTAND A TRAFFIC BARRIER COLLISION LOAD. THE SUPPORT OF EXCAVATION SHALL EXTEND UP TO A HEIGHT THAT IS EQUAL TO OR HIGHER THAN THE TOP OF THE ADJACENT BARRIER.

5. CONCRETE BARRIER EXPOSED TO TRAFFIC SHALL BE DELINEATED TO MATCH THE CORRESPONDING TEMPORARY PAVEMENT MARKING. REFLECTORS SHALL BE MOUNTED EVERY 20 FEET ALONG THE SIDE OF THE BARRIER EXPOSED TO TRAFFIC.

6. THE CONTRACTOR MAY FASTEN THE TEMPORARY TRAFFIC BARRIER TO THE EXISTING BRIDGE DECK DURING PHASE 1.

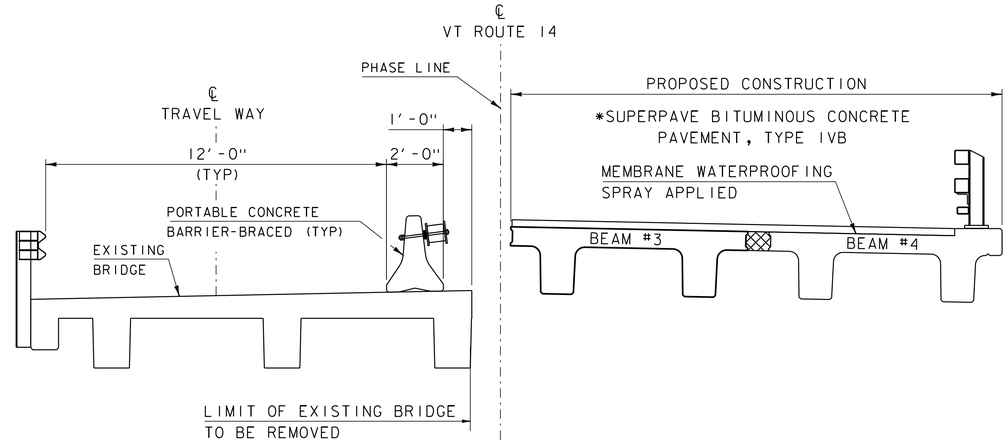

PHASE #1 BRIDGE TYPICAL SECTION
(NOT TO SCALE)

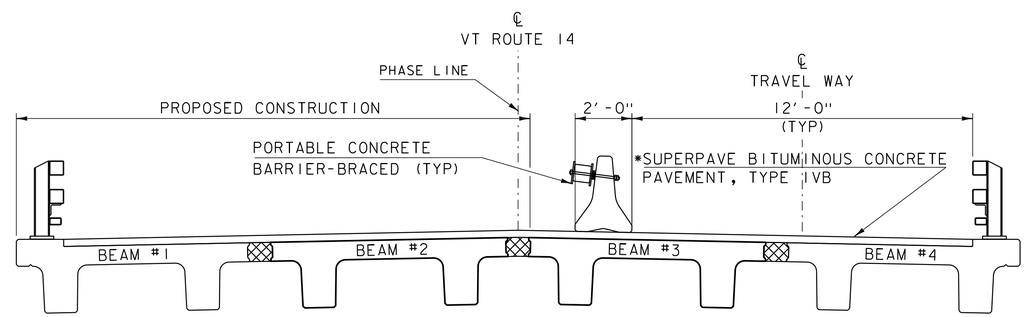

PHASE #2 BRIDGE TYPICAL SECTION
(NOT TO SCALE)

*THE TRAVEL WAY SURFACE OVER THE PROPOSED STRUCTURE CONSTRUCTED DURING PHASE 1 WILL BE 1½" SUPERPAVE BITUMINOUS CONCRETE PAVEMENT, TYPE IVB OVER SPRAY APPLIED WATERPROOFING MEMBRANE UNTIL FINAL PAVING OPERATIONS ARE COMPLETED DURING PHASE 2.

PROJECT NAME: CALAIS	
PROJECT NUMBER: BHF 037-2(11)	
FILE NAME: s12b146typical.dgn	PLOT DATE: 02-JUN-2020
PROJECT LEADER: G. LAROCHE	DRAWN BY: S. COLEY
DESIGNED BY: G. ROKES	CHECKED BY: G. LAROCHE
PHASE TYPICAL SECTIONS	SHEET 101 OF 134

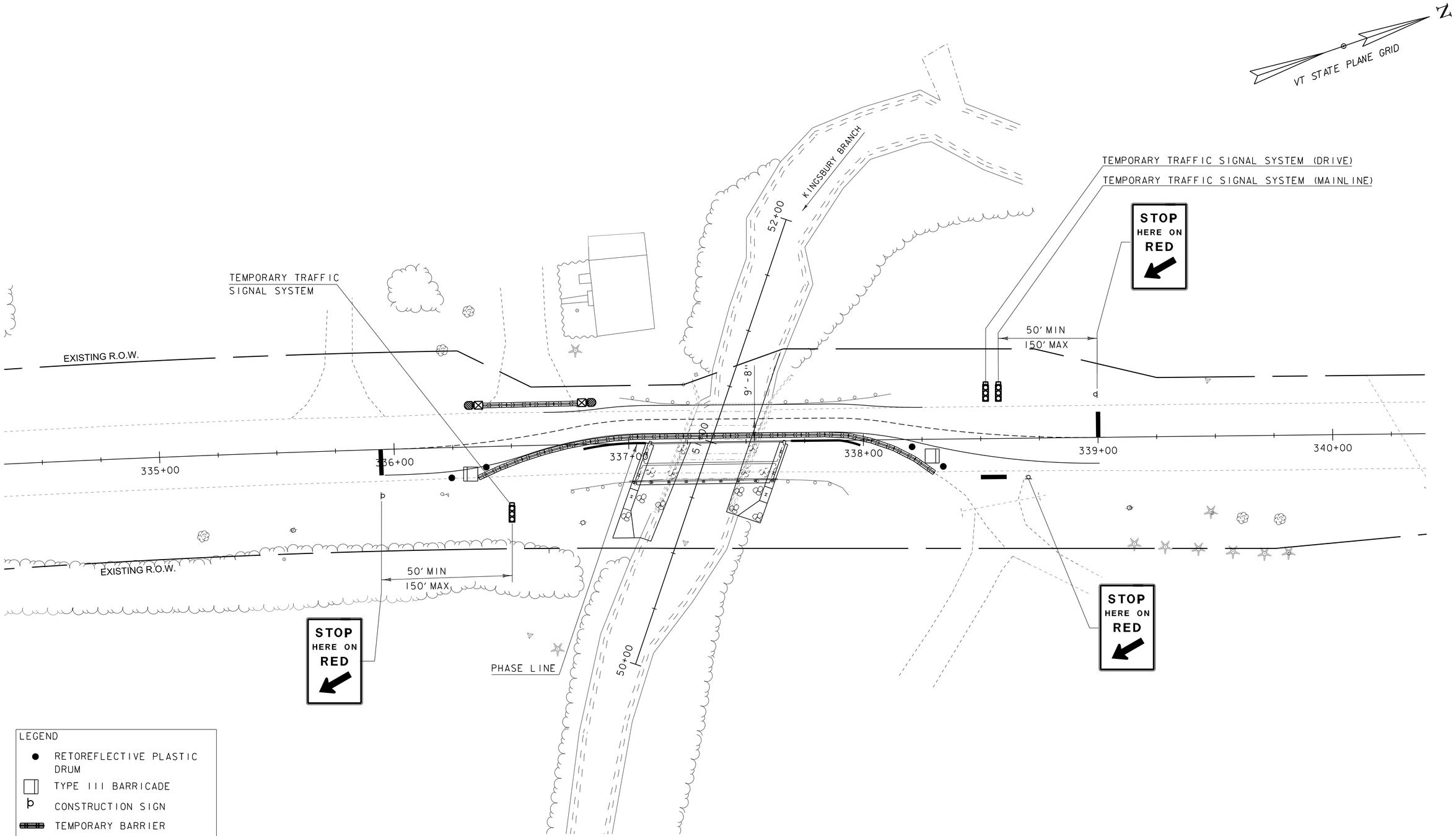

LEGEND

- ● RETOREFLECTIVE PLASTIC DRUM
- TYPE III BARRICADE
- CONSTRUCTION SIGN
- TEMPORARY BARRIER
- ENERGY ABSORPTION ATTENUATOR
- SIGNAL HEAD
- STOP BAR

TRAFFIC CONTROL NOTES:

1. PHASING LAYOUTS ARE CONCEPTUAL ONLY.

2. THE CONTRACTOR SHALL MAINTAIN ACCESS TO ALL PROPERTIES THAT ACCESS VT-14 WITHIN THE PROJECT LIMITS AT ALL TIMES, FOR ALL PHASES OF CONSTRUCTION. IF ACCESS CANNOT BE MAINTAINED, THE CONTRACTOR SHALL COORDINATE ACCESS WITH THE PROPERTY OWNER AND OBTAIN APPROVAL OF THE ENGINEER.

PROJECT NAME: CALAIS	
PROJECT NUMBER: BHF 037-2(11)	
FILE NAME: s12b146tcs1.dgn	PLOT DATE: 02-JUN-2020
PROJECT LEADER: G. LAROCHE	DRAWN BY: G. ROKES
DESIGNED BY: G. ROKES	CHECKED BY: G. LAROCHE
PHASE 1 LAYOUT	SHEET 102 OF 134

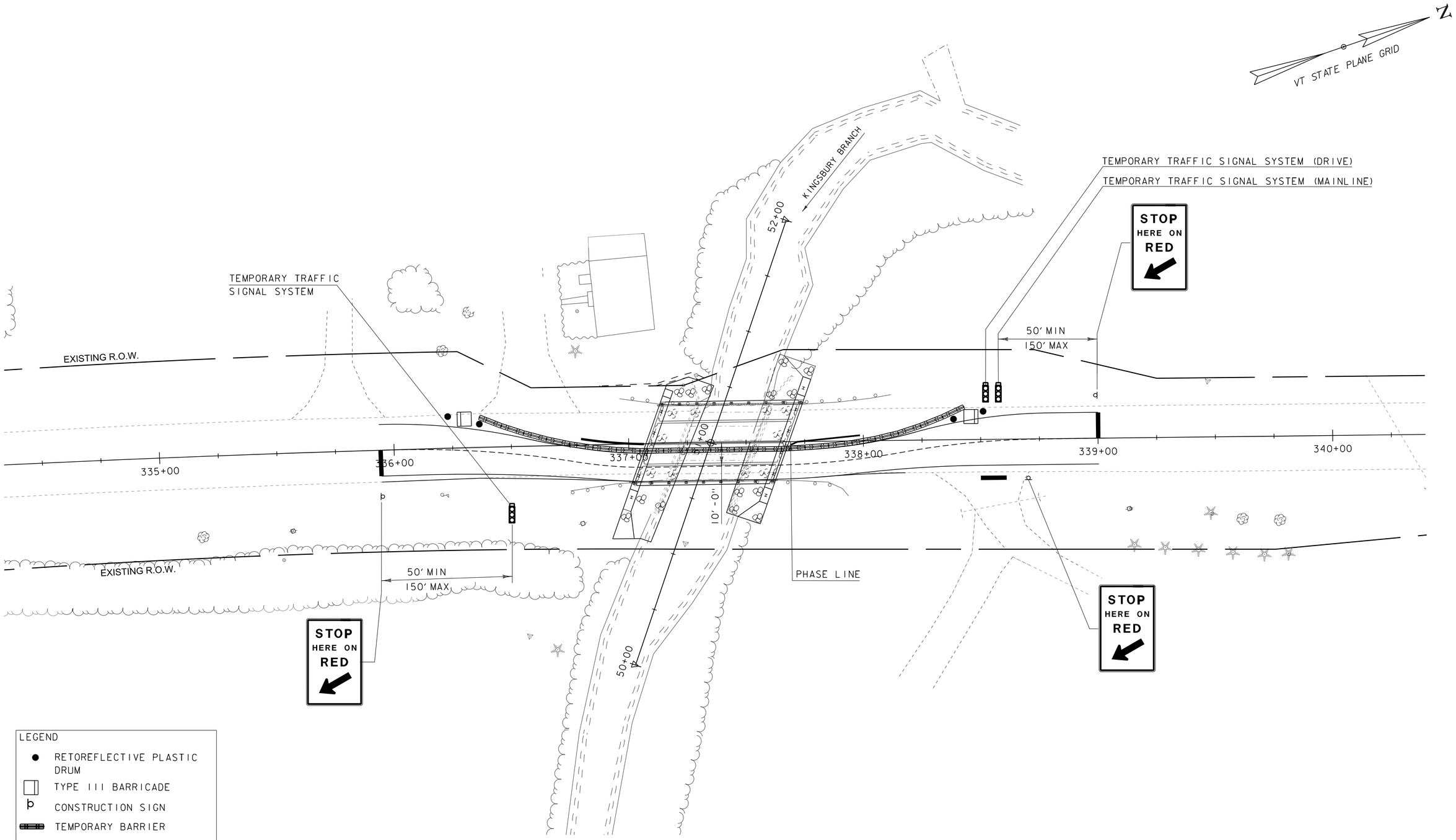

LEGEND

- ● RETOREFLECTIVE PLASTIC DRUM
- TYPE III BARRICADE
- CONSTRUCTION SIGN
- TEMPORARY BARRIER
- ENERGY ABSORPTION ATTENUATOR
- SIGNAL HEAD
- STOP BAR

TRAFFIC CONTROL NOTES:

1. PHASING LAYOUTS ARE CONCEPTUAL ONLY.

2. THE CONTRACTOR SHALL MAINTAIN ACCESS TO ALL PROPERTIES THAT ACCESS VT-14 WITHIN THE PROJECT LIMITS AT ALL TIMES, FOR ALL PHASES OF CONSTRUCTION. IF ACCESS CANNOT BE MAINTAINED, THE CONTRACTOR SHALL COORDINATE ACCESS WITH THE PROPERTY OWNER AND OBTAIN APPROVAL OF THE ENGINEER.

PROJECT NAME: CALAIS	
PROJECT NUMBER: BHF 037-2(11)	
FILE NAME: s12b146tcs1.dgn	PLOT DATE: 02-JUN-2020
PROJECT LEADER: G. LAROCHE	DRAWN BY: G. ROKES
DESIGNED BY: G. ROKES	CHECKED BY: G. LAROCHE
PHASE 2 LAYOUT	SHEET 103 OF 134

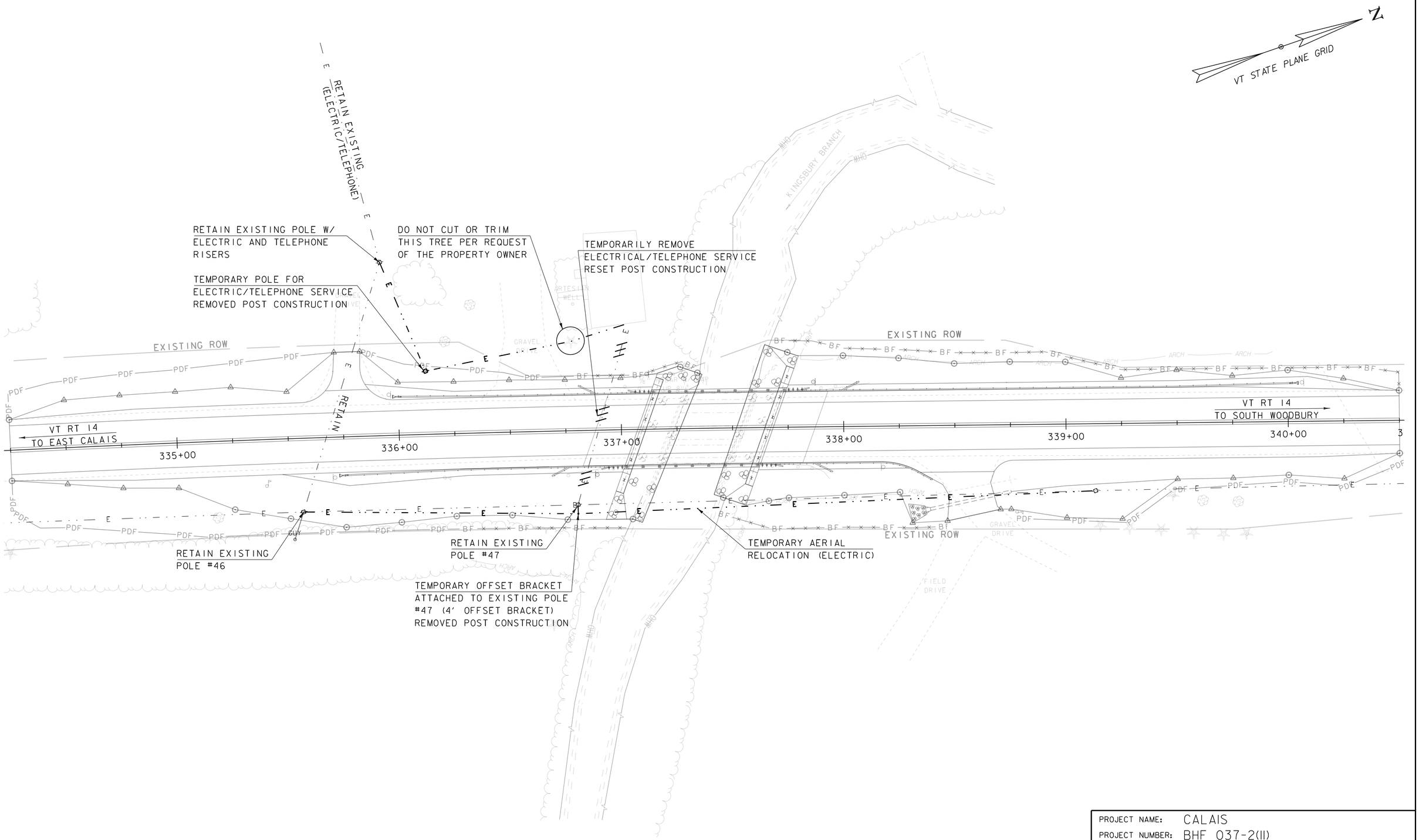

PROJECT NAME: CALAIS	
PROJECT NUMBER: BHF 037-2(11)	
FILE NAME: s12b146ut.dgn	PLOT DATE: 02-JUN-2020
PROJECT LEADER: G. LAROCHE	DRAWN BY: G. ROKES
DESIGNED BY: G. ROKES	CHECKED BY: G. LAROCHE
UTILITY LAYOUT SHEET	SHEET 104 OF 134

SOIL CLASSIFICATION

AASHTO	
A1	Gravel and Sand
A3	Fine Sand
A2	Silty or Clayey Gravel and Sand
A4	Silty Soil - Low Compressibility
A5	Silty Soil - Highly Compressible
A6	Clayey Soil - Low Compressibility
A7	Clayey Soil - Highly Compressible

ROCK QUALITY DESIGNATION

R.Q.D. (%)	ROCK DESCRIPTION
<25	Very Poor
25 to 50	Poor
51 to 75	Fair
76 to 90	Good
>90	Excellent

SHEAR STRENGTH

UNDRAINED SHEAR STRENGTH IN P.S.F.	CONSISTENCY
<250	Very Soft
250-500	Soft
500-1000	Med. Stiff
1000-2000	Stiff
2000-4000	Very Stiff
>4000	Hard

CORRELATION GUIDE OF "N" TO DENSITY/CONSISTENCY

DENSITY (GRANULAR SOILS)		CONSISTENCY (COHESIVE SOILS)	
N	DESCRIPTIVE TERM	N	DESCRIPTIVE TERM
<5	Very Loose	<2	Very Soft
5-10	Loose	2-4	Soft
11-24	Med. Dense	5-8	Med. Stiff
25-50	Dense	9-15	Stiff
>50	Very Dense	16-30	Very Stiff
		31-60	Hard
		>60	Very Hard

COMMONLY USED SYMBOLS

▼	Water Elevation
⊗	Standard Penetration Boring
⊕	Auger Boring
⊙	Rod Sounding
S	Sample
N	Standard Penetration Test Blow Count Per Foot For: 2" O.D. Sampler 1 3/8" I.D. Sampler Hammer Weight Of 140 Lbs. Hammer Fall Of 30"
VS	Field Vane Shear Test
US	Undisturbed Soil Sample
B	Blast
DC	Diamond Core
MD	Mud Drill
WA	Wash Ahead
HSA	Hollow Stem Auger
AX	Core Size 1 1/8"
BX	Core Size 1 5/8"
NX	Core Size 2 1/8"
M	Double Tube Core Barrel Used
LL	Liquid Limit
PL	Plastic Limit
PI	Plasticity Index
NP	Non Plastic
w	Moisture Content (Dry Wgt. Basis)
D	Dry
M	Moist
MTW	Moist To Wet
W	Wet
Sat	Saturated
Bo	Boulder
Gr	Gravel
Sa	Sand
Si	Silt
Cl	Clay
HP	Hardpan
Le	Ledge
NLTD	No Ledge To Depth
CNPF	Can Not Penetrate Further
TLOB	Top of Ledge Or Boulder
NR	No Recovery
Rec.	Recovery
%Rec.	Percent Recovery
RQD	Rock Quality Designation
CBR	California Bearing Ratio
<	Less Than
>	Greater Than
R	Refusal (N > 100)
VTSPG	NAD83 - See Note 7

COLOR

blk	Black	pnk	Pink
bl	Blue	pu	Purple
brn	Brown	rd	Red
dk	Dark	tn	Tan
gry	Gray	wh	White
gn	Green	yel	Yellow
lt	Light	mltc	Multicolored
or	Orange		

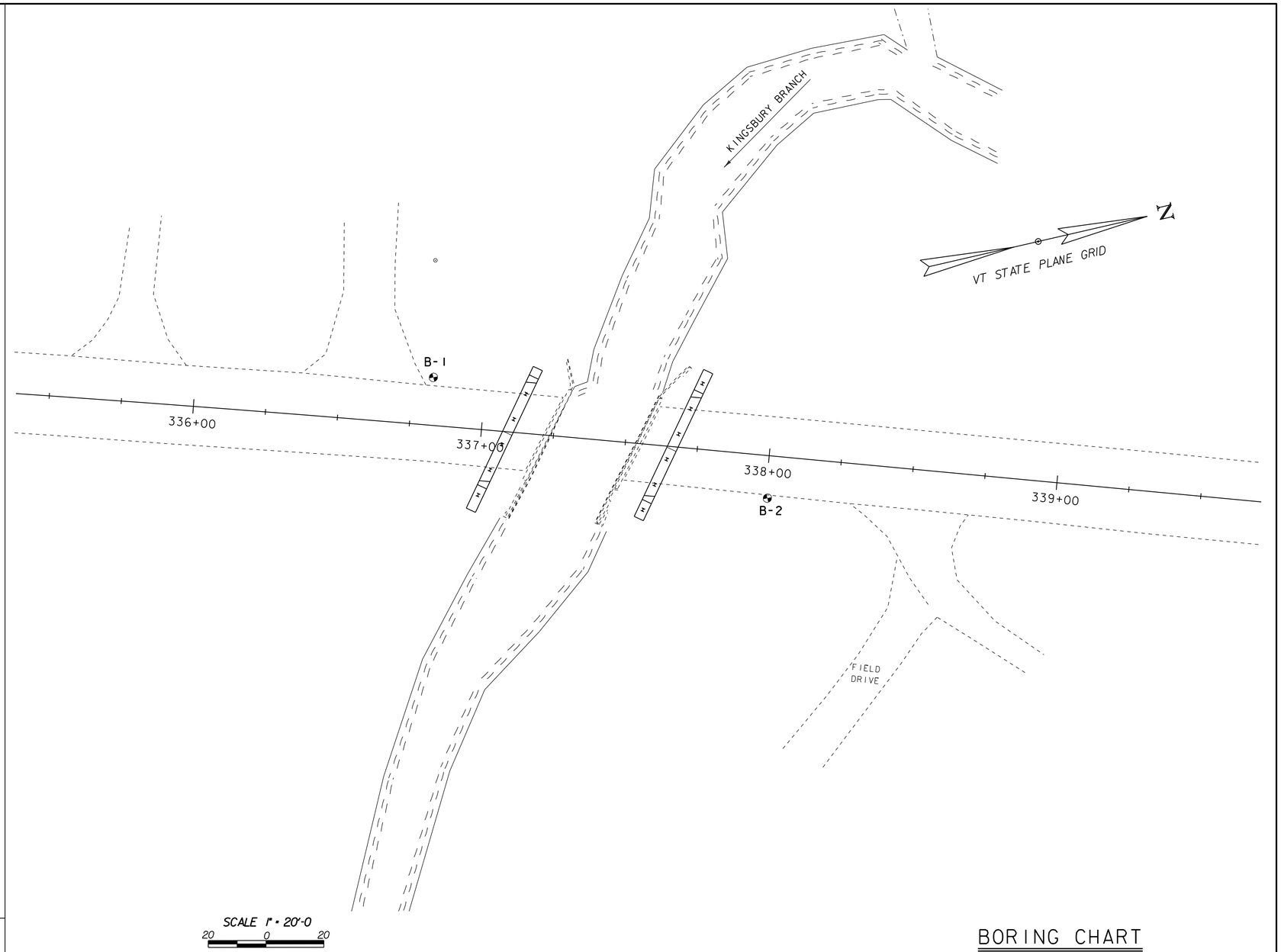

DEFINITIONS (AASHTO)

BEDROCK (LEDGE) - Rock in its native location of indefinite thickness.

BOULDER - A rock fragment with an average dimension > 12 inches.

COBBLE - Rock fragments with an average dimension between 3 and 12 inches.

GRAVEL - Rounded particles of rock < 3" and > 0.0787" (#10 sieve).

SAND - Particles of rock < 0.0787" (#10 sieve) and > 0.0029" (#200 sieve).

SILT - Soil < 0.0029" (#200 sieve), non or slightly plastic and exhibits no strength when air-dried.

CLAY - Fine grained soil, exhibits plasticity when moist and considerable strength when air-dried.

VARVED - Alternate layers of silt and clay.

HARDPAN - Extremely dense soil, cemented layer, not softened when wet.

MUCK - Soft organic soil (containing > 10% organic material.

MOISTURE CONTENT - Weight of water divided by dry weight of soil.

FLOWING SAND - Granular soil so saturated (loose) that it flows into drill casing during extraction of wash rod.

STRIKE - Angle from magnetic north to line of intersection of bed with a horizontal plane.

DIP - Inclination of bed with a horizontal plane.

GENERAL NOTES

1. The subsurface explorations shown herein were made between March 19 and April 15, 2015 by Terracon.

2. Soil and rock classifications, properties and descriptions are based on engineering interpretation from available subsurface information by the Agency and may not necessarily reflect actual variations in subsurface conditions that may be encountered between individual boring or sample locations.

3. Observed water levels and/or conditions indicated are as recorded at the time of exploration and may vary according to the prevailing rainfall, methods of exploration and other factors.

4. Engineering judgment was exercised in preparing the subsurface information presented herein. Analysis and interpretation of subsurface data was performed and interpreted for Agency design and estimating purposes. Presentation of the information in the Contract is intended to provide the Contractor access to the same data available to the Agency. The subsurface information is presented in good faith and is not intended as a substitute for personal investigation, independent interpretation, independent analysis or judgment by the Contractor.

5. Pictorial structure details shown on the boring plan layout or soils profile are for illustrative purposes only and may not accurately portray final contract details.

6. Terminology used on boring logs to describe the hardness, degree of weathering, and spacing of fractures, joints and other discontinuities in the bedrock is defined in the AASHTO Manual on Subsurface Investigations, 1988.

7. Northing and Easting coordinates are shown in Vermont State Plane Grid North American Datum 1983 in meters and survey feet.

BORING CHART

HOLE NO.	SURV. STATION	OFFSET	GROUND ELEV.	ELEV. TLOB
B-1	336+81.9	16.6 LT	901.0	N/A
B-2	338+00.7	14.7 RT	902.0	N/A

* SEE BORING LOGS FOR NORTHING AND EASTING COORDINATES OF BORINGS

PROJECT NAME: CALAIS
PROJECT NUMBER: BHF 037-2(11)

FILE NAME: s12b146bor.dgn
PROJECT LEADER: G. LAROCHE
DESIGNED BY: F.BARROWS
BORING INFORMATION SHEET

PLOT DATE: 02-JUN-2020
DRAWN BY: G ROKES
CHECKED BY: F.BARROWS
SHEET 105 OF 134

STATE OF VERMONT
AGENCY OF TRANSPORTATION
MATERIALS & RESEARCH SECTION
SUBSURFACE INFORMATION

BORING LOG

VT Route 14, Bridge 82 Over Kingsbury Branch
Calais, Vermont

BHF 037-2(11)

Boring No.: B-1
Page No.: 1 of 4
Pin No.: s12b146
Checked By: ASP

Boring Crew: Jay/Thiet Ta
Date Started: 4/15/14 Date Finished: 4/21/14
VTSPG NAD83: N 686993.54 ft E 1661914.90 ft
Station: 336+81.9 Offset: 16.6LT
Ground Elevation: 901.0 ft

	Casing	Sampler
Type:	Flushwall	SPT
I.D.:	4 in	2 in
Hammer Wt:	N.A.	140 lb.
Hammer Fall:	N.A.	30 in.
Hammer/Rod Type:		
Rig:	CME 75	CE = 1.33

Groundwater Observations

Date	Depth (ft)	Notes
04/15/14	7.0	Based on sample saturation

Depth (ft)	Strata (1)	CLASSIFICATION OF MATERIALS (Description)	Blows/6" (N Value)	Moisture Content %	Gravel %	Sand %	Fines %
		Topsoil (f-m sand)	4-5-6-6 (11)	13.4	20.5	62.6	16.9
		A-2-4, GrSa, Rec. = 1.5 ft, (FILL)					
		A-2-4, SiSa, Rec. = 0.67 ft, (FILL)	25-50/6" (50+)	19.1	14.1	59.9	26.0
		A-3, Sa, Rec. = 0.83 ft	2-2-3-3 (5)	8.5	1.2	90.5	8.3
		A-1-B, Sa, Rec. = 1.0 ft	4-4-3-3 (7)	17.8	14.3	68.3	17.4
10		A-1-B, SiGrSa, Rec. = 0.83 ft	6-2-4-4 (6)	16.3	38.0	40.1	21.9
		A-1-B, GrSa, Rec. = 1.17 ft	8-2-2-4 (4)	13.7	22.3	60.4	17.3
20		A-1-B, SiGrSa, Rec. = 0.67 ft	7-6-5-4 (11)	14.4	38.6	38.6	22.8
		A-1-B, SiSaGr, Rec. = 0.67 ft	14-8-9-5 (17)	12.3	50.4	29.0	20.6
30		A-1-B, Sa, Rec. = 1.33 ft	5-5-5-6 (10)	20.7	8.0	77.5	14.5
		A-1-B, SiSa, Rec. = 1.5 ft	15-8-8-8 (16)	19.1	3.9	75.8	20.3
40		A-1-B, GrSa, Rec. = 1.0 ft	6-10-15-16 (25)	14.8	25.8	58.3	15.9
		A-1-B, SiGrSa, Rec. = 0.83 ft	13-13-8-8 (21)	14.5	36.9	40.9	22.2
		Drill rig grinding at 47 feet					
50		A-1-B, SiGrSa, Rec. = 1.33 ft	13-18-16-12 (34)	13.9	39.5	39.9	20.6

Notes:
1. Stratification lines represent approximate boundary between material types. Transition may be gradual.
2. N Values have not been corrected for hammer energy. CE is the hammer energy correction factor. CE is an estimated value.
3. Water level readings have been made at times and under conditions stated. Fluctuations of groundwater may occur due to other factors than those present at the time measurements were made.
4. Ground surface elevations indicated on the boring logs were estimated based on the grading plan provided by VAOT.

Terracon

BOTTOM OF PILE CAP
ABUTMENT I
ELEV. = 895.50

J1145112.GPJ VERMONT AOT.GDT 8/13/14

2010 COPY

STATE OF VERMONT
AGENCY OF TRANSPORTATION
MATERIALS & RESEARCH SECTION
SUBSURFACE INFORMATION

BORING LOG

VT Route 14, Bridge 82 Over Kingsbury Branch
Calais, Vermont

BHF 037-2(11)

Boring No.: B-1
Page No.: 2 of 4
Pin No.: s12b146
Checked By: ASP

Boring Crew: Jay/Thiet Ta
Date Started: 4/15/14 Date Finished: 4/21/14
VTSPG NAD83: N 686993.54 ft E 1661914.90 ft
Station: 336+81.9 Offset: 16.6LT
Ground Elevation: 901.0 ft

	Casing	Sampler
Type:	Flushwall	SPT
I.D.:	4 in	2 in
Hammer Wt:	N.A.	140 lb.
Hammer Fall:	N.A.	30 in.
Hammer/Rod Type:		
Rig:	CME 75	CE = 1.33

Groundwater Observations

Date	Depth (ft)	Notes
04/15/14	7.0	Based on sample saturation

Depth (ft)	Strata (1)	CLASSIFICATION OF MATERIALS (Description)	Blows/6" (N Value)	Moisture Content %	Gravel %	Sand %	Fines %
		Drill rig grinding at 55 feet					
60		Tough grinding, Rec. = 0.0 ft	50/1" (50+)				
		Broke through boulder at 62 feet					
		Drill rig grinding again at 65 feet					
70		Broken weathered rock fragments, Rec. = 0.17 ft	26-50/1" (50+)	15.7			
		Boulders and cobbles- coring, 1min., 1 min., 2 min. for 1.25 feet					
		Broke through cobble/boulder layer at 75 feet					
80		A-1-B, Sa, Rec. = 1.33 ft	11-10-11-12 (21)	18.3	6.4	80.1	13.5
90		A-1-B, Sa, Rec. = 1.5 ft	11-15-12-16 (27)	17.6	11.0	73.9	15.1
		Drill rig grinding at 93 feet					
100		A-1-B, Sa, Rec. = 1.5 ft	20-18-21-26 (29)	18.6	9.1	76.4	14.5

Notes:
1. Stratification lines represent approximate boundary between material types. Transition may be gradual.
2. N Values have not been corrected for hammer energy. CE is the hammer energy correction factor. CE is an estimated value.
3. Water level readings have been made at times and under conditions stated. Fluctuations of groundwater may occur due to other factors than those present at the time measurements were made.
4. Ground surface elevations indicated on the boring logs were estimated based on the grading plan provided by VAOT.

Terracon

ESTIMATED PILE TIP
ABUTMENT I
ELEV. = 810.50

J1145112.GPJ VERMONT AOT.GDT 8/13/14

2010 COPY

PROJECT NAME: CALAIS
PROJECT NUMBER: BHF 037-2(11)

FILE NAME: s12b146bor.dgn
PROJECT LEADER: G. LAROCHE
DESIGNED BY: F.BARROWS
BORING LOGS SHEET 1

PLOT DATE: 02-JUN-2020
DRAWN BY: S. COLEY
CHECKED BY: F.BARROWS
SHEET 106 OF 134

STATE OF VERMONT
AGENCY OF TRANSPORTATION
MATERIALS & RESEARCH SECTION
SUBSURFACE INFORMATION

BORING LOG

VT Route 14, Bridge 82 Over Kingsbury Branch
Calais, Vermont

BHF 037-2(11)

Boring No.: B-1
Page No.: 3 of 4
Pin No.: s12b146
Checked By: ASP

Boring Crew: Jay/Thiet Ta
Date Started: 4/15/14 Date Finished: 4/21/14
VTSPG NAD83: N 686993.54 ft E 1661914.90 ft
Station: 336+81.9 Offset: 16.6LT
Ground Elevation: 901.0 ft

	Casing	Sampler
Type:	Flushwall	SPT
I.D.:	4 in	2 in
Hammer Wt:	N.A.	140 lb.
Hammer Fall:	N.A.	30 in.
Hammer/Rod Type:		
Rig:	CME 75	CE = 1.33

Groundwater Observations

Date	Depth (ft)	Notes
04/15/14	7.0	Based on sample saturation

Depth (ft)	Strata (1)	CLASSIFICATION OF MATERIALS (Description)	Blows/6" (N Value)	Moisture Content %	Gravel %	Sand %	Fines %
110		A-1-B, GrSa, Rec. = 1.5 ft	26-34-39-28 (63)	14.7	22.0	60.0	18.0
120		A-1-b, grinding through gravel, cobble deposit at 118 feet (TILL), SaGr, Rec. = 0.33 ft	87-26/3" (50+)	11.6	54.9	26.5	18.6
130		A-1-B, SiSaGr, Rec. = 1.17 ft, (TILL)	27-32-26-33 (58)	11.6	54.3	25.3	20.4
140							
150		A-1-B, SaGr, Rec. = 1.17 ft, (TILL)	34-43-53-58 (96)	10.5	56.4	25.8	17.8

Notes:
1. Stratification lines represent approximate boundary between material types. Transition may be gradual.
2. N Values have not been corrected for hammer energy. CE is the hammer energy correction factor. CE is an estimated value.
3. Water level readings have been made at times and under conditions stated.
Fluctuations of groundwater may occur due to other factors than those present at the time measurements were made.
4. Ground surface elevations indicated on the boring logs were estimated based on the grading plan provided by VAOT.

Terracon

2010 COPY J1145112.GPJ VERMONT AOT.GDT 8/13/14

STATE OF VERMONT
AGENCY OF TRANSPORTATION
MATERIALS & RESEARCH SECTION
SUBSURFACE INFORMATION

BORING LOG

VT Route 14, Bridge 82 Over Kingsbury Branch
Calais, Vermont

BHF 037-2(11)

Boring No.: B-1
Page No.: 4 of 4
Pin No.: s12b146
Checked By: ASP

Boring Crew: Jay/Thiet Ta
Date Started: 4/15/14 Date Finished: 4/21/14
VTSPG NAD83: N 686993.54 ft E 1661914.90 ft
Station: 336+81.9 Offset: 16.6LT
Ground Elevation: 901.0 ft

	Casing	Sampler
Type:	Flushwall	SPT
I.D.:	4 in	2 in
Hammer Wt:	N.A.	140 lb.
Hammer Fall:	N.A.	30 in.
Hammer/Rod Type:		
Rig:	CME 75	CE = 1.33

Groundwater Observations

Date	Depth (ft)	Notes
04/15/14	7.0	Based on sample saturation

Depth (ft)	Strata (1)	CLASSIFICATION OF MATERIALS (Description)	Blows/6" (N Value)	Moisture Content %	Gravel %	Sand %	Fines %
160		A-2-4, Sa, Rec. = 1.5 ft, (TILL)	40-51-60 (111)	21.7	0.9	81.5	17.6
		Hole stopped @ 160.0 ft					
170							
180							
190							
200							

Notes:
1. Stratification lines represent approximate boundary between material types. Transition may be gradual.
2. N Values have not been corrected for hammer energy. CE is the hammer energy correction factor. CE is an estimated value.
3. Water level readings have been made at times and under conditions stated.
Fluctuations of groundwater may occur due to other factors than those present at the time measurements were made.
4. Ground surface elevations indicated on the boring logs were estimated based on the grading plan provided by VAOT.

Terracon

2010 COPY J1145112.GPJ VERMONT AOT.GDT 8/13/14

PROJECT NAME: CALAIS
PROJECT NUMBER: BHF 037-2(11)

FILE NAME: s12b146bor.dgn
PROJECT LEADER: G. LAROCHE
DESIGNED BY: F.BARROWS
BORING LOGS SHEET 2

PLOT DATE: 02-JUN-2020
DRAWN BY: S. COLEY
CHECKED BY: F.BARROWS
SHEET 107 OF 134

STATE OF VERMONT
AGENCY OF TRANSPORTATION
MATERIALS & RESEARCH SECTION
SUBSURFACE INFORMATION

BORING LOG

VT Route 14, Bridge 82 Over Kingsbury Branch
Calais, Vermont

BHF 037-2(11)

Boring No.: B-2
Page No.: 1 of 3
Pin No.: s12b146
Checked By: ASP

Boring Crew: Jay/Thiet Ta/JF
Date Started: 3/19/14 Date Finished: 4/15/14
VTSPG NAD83: N 687096.77 ft E 1661981.59 ft
Station: 338+00.7 Offset: 14.7RT
Ground Elevation: 902.0 ft

	Casing	Sampler
Type:	Flushwall	SPT
I.D.:	4 in	2 in
Hammer Wt:	N.A.	140 lb.
Hammer Fall:	N.A.	30 in.
Hammer/Rod Type:		
Rig:	CME 75	CE = 1.33

Groundwater Observations		
Date	Depth (ft)	Notes
03/14/14	5.9	

Depth (ft)	Strata (1)	CLASSIFICATION OF MATERIALS (Description)	Blows/6" (N Value)	Moisture Content %	Gravel %	Sand %	Fines %
		A-2-4, SiSa, Rec. = 0.7 ft, (FILL)	5-17-3-4 (20)	15.8	10.0	65.2	24.8
10		(pebbles), Rec. = 0.0 ft	15-12-8-15 (20)				
		Subrounded pebbles, stream deposits, Rec. = 0.0 ft	3-3-3-2 (6)				
20		A-2-4, Sa, Rec. = 0.5 ft	5-3-3-4 (6)	18.5	8.1	80.4	11.5
		Rec. = 0.7 ft, 25.0 ft - 27.0 ft	6-6-6-6 (12)				
30		A-2-4, SiSa, Rec. = 0.92 ft	6-6-6-5 (12)	16.1	9.5	68.8	21.7
		A-3, Sa, Rec. = 0.83 ft	8-6-6-8 (12)	18.1	3.0	87.7	9.3
40		A-1-B, GrSa, Rec. = 0.83 ft	19-23-20-18 (43)	13.3	27.1	63.6	9.3
		A-2-4, GrSa, Rec. = 0.5 ft	7-6-8-12 (14)	14.4	23.2	63.7	13.1
50		A-1-A, Gr, Rec. = 0.0 ft	5-13-17-24 (30)				

BOTTOM OF PILE CAP
ABUTMENT 2
ELEV. = 895.50

Notes:
1. Stratification lines represent approximate boundary between material types. Transition may be gradual.
2. N Values have not been corrected for hammer energy. CE is the hammer energy correction factor. CE is an estimated value.
3. Water level readings have been made at times and under conditions stated.
Fluctuations of groundwater may occur due to other factors than those present at the time measurements were made.
4. Ground surface elevations indicated on the boring logs were estimated based on the grading plan provided by VAOT.

Terracon

2010 COPY J1145112.GPJ VERMONT AOT.GDT 8/13/14

STATE OF VERMONT
AGENCY OF TRANSPORTATION
MATERIALS & RESEARCH SECTION
SUBSURFACE INFORMATION

BORING LOG

VT Route 14, Bridge 82 Over Kingsbury Branch
Calais, Vermont

BHF 037-2(11)

Boring No.: B-2
Page No.: 2 of 3
Pin No.: s12b146
Checked By: ASP

Boring Crew: Jay/Thiet Ta/JF
Date Started: 3/19/14 Date Finished: 4/15/14
VTSPG NAD83: N 687096.77 ft E 1661981.59 ft
Station: 338+00.7 Offset: 14.7RT
Ground Elevation: 902.0 ft

	Casing	Sampler
Type:	Flushwall	SPT
I.D.:	4 in	2 in
Hammer Wt:	N.A.	140 lb.
Hammer Fall:	N.A.	30 in.
Hammer/Rod Type:		
Rig:	CME 75	CE = 1.33

Groundwater Observations		
Date	Depth (ft)	Notes
03/14/14	5.9	

Depth (ft)	Strata (1)	CLASSIFICATION OF MATERIALS (Description)	Blows/6" (N Value)	Moisture Content %	Gravel %	Sand %	Fines %
		A-2-4, Sa, Rec. = 1.33 ft	7-8-8-12 (16)	22.9	0.6	82.2	17.2
60		A-4, SaSi, Rec. = 1.5 ft	9-12-16-22 (28)	23.6	0.3	47.4	52.3
		A-2-4, SiGrSa, Rec. = 1.17 ft	10-19-18-25 (37)	16.4	28.0	49.6	22.4
70		A-1-B, SiSaGr, Rec. = 1.0 ft	13-16-15-23 (31)	11.1	47.4	31.7	20.9
		A-1-B, GrSa, Rec. = 0.67 ft	11-12-12-14 (24)	14.6	23.7	59.3	17.0
80		A-3, Sa, Rec. = 1.17 ft	8-13-12-16 (25)	20.9	2.8	88.1	9.1
		A-3, Sa, Rec. = 1.33 ft	8-11-16-19 (27)	21.0	2.9	87.7	9.4
90		A-1-A, SaGr, Rec. = 0.67 ft	17-14-13-18 (27)	9.5	59.9	26.6	13.5
		A-1-B, Sa, Rec. = 1.33 ft	11-15-14-17 (29)	17.2	3.2	82.4	14.4
100		A-1-B, Sa	12-15-15-15 (30)	16.4	3.2	84.2	12.6

ESTIMATED PILE TIP
ABUTMENT 2
ELEV. = 810.50

Notes:
1. Stratification lines represent approximate boundary between material types. Transition may be gradual.
2. N Values have not been corrected for hammer energy. CE is the hammer energy correction factor. CE is an estimated value.
3. Water level readings have been made at times and under conditions stated.
Fluctuations of groundwater may occur due to other factors than those present at the time measurements were made.
4. Ground surface elevations indicated on the boring logs were estimated based on the grading plan provided by VAOT.

Terracon

2010 COPY J1145112.GPJ VERMONT AOT.GDT 8/13/14

PROJECT NAME: CALAIS
PROJECT NUMBER: BHF 037-2(11)

FILE NAME: s12b146bor.dgn
PROJECT LEADER: G. LAROCHE
DESIGNED BY: F.BARROWS
BORING LOGS SHEET 3

PLOT DATE: 02-JUN-2020
DRAWN BY: S. COLEY
CHECKED BY: F.BARROWS
SHEET 108 OF 134

STATE OF VERMONT
AGENCY OF TRANSPORTATION
MATERIALS & RESEARCH SECTION
SUBSURFACE INFORMATION

BORING LOG

VT Route 14, Bridge 82 Over Kingsbury Branch
Calais, Vermont

BHF 037-2(11)

Boring No.: B-2
Page No.: 3 of 3
Pin No.: s12b146
Checked By: ASP

Boring Crew: Jay/Thiet Ta/JF
Date Started: 3/19/14 Date Finished: 4/15/14
VTSPG NAD83: N 687096.77 ft E 1661981.59 ft
Station: 338+00.7 Offset: 14.7RT
Ground Elevation: 902.0 ft

	Casing	Sampler
Type:	Flushwall	SPT
I.D.:	4 in	2 in
Hammer Wt:	N.A.	140 lb.
Hammer Fall:	N.A.	30 in.
Hammer/Rod Type:		
Rig:	CME 75	CE = 1.33

Groundwater Observations

Date	Depth (ft)	Notes
03/14/14	5.9	

Depth (ft)	Strata (1)	CLASSIFICATION OF MATERIALS (Description)	Blows/6" (N Value)	Moisture Content %	Gravel %	Sand %	Fines %
110		Boulder (drill rig grinding) at 110 feet					
		TILL at 116 feet					
120		A-1-A, Gr, Rec. = 1.0 ft, (TILL)	30-32-32-35 (64)	8.9	65.8	18.9	15.3
130		A-1-B, SaGr, Rec. = 1.33 ft, (TILL)	52-48-40-27 (88)	12.6	60.5	26.3	13.2
140		(roller bit grinding), Rec. = 0.0 ft	50/1" (50+)				
		Slow roller bit through gravel/cobbles					
150		A-2-4, Sa, (TILL)	25-31-35-58 (66)	21.2	0.4	83.6	16.0
		Hole stopped @ 152.0 ft					

Notes:
1. Stratification lines represent approximate boundary between material types. Transition may be gradual.
2. N Values have not been corrected for hammer energy. CE is the hammer energy correction factor. CE is an estimated value.
3. Water level readings have been made at times and under conditions stated.
Fluctuations of groundwater may occur due to other factors than those present at the time measurements were made.
4. Ground surface elevations indicated on the boring logs were estimated based on the grading plan provided by VAOT.

Terracon

2010 COPY J1145112.GPJ VERMONT AOT.GDT 8/13/14

PROJECT NAME: CALAIS
PROJECT NUMBER: BHF 037-2(11)

FILE NAME: s12b146bor.dgn
PROJECT LEADER: G. LAROCHE
DESIGNED BY: F.BARROWS
BORING LOGS SHEET 4

PLOT DATE: 02-JUN-2020
DRAWN BY: S. COLEY
CHECKED BY: F.BARROWS
SHEET 109 OF 134

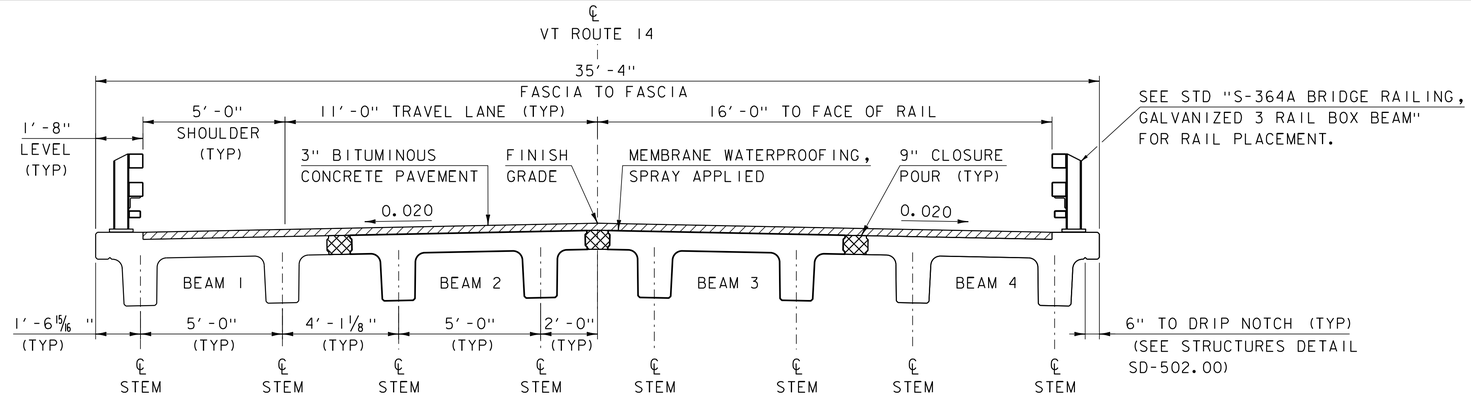

BRIDGE TYPICAL SECTION

SCALE 3/8" = 1'-0"

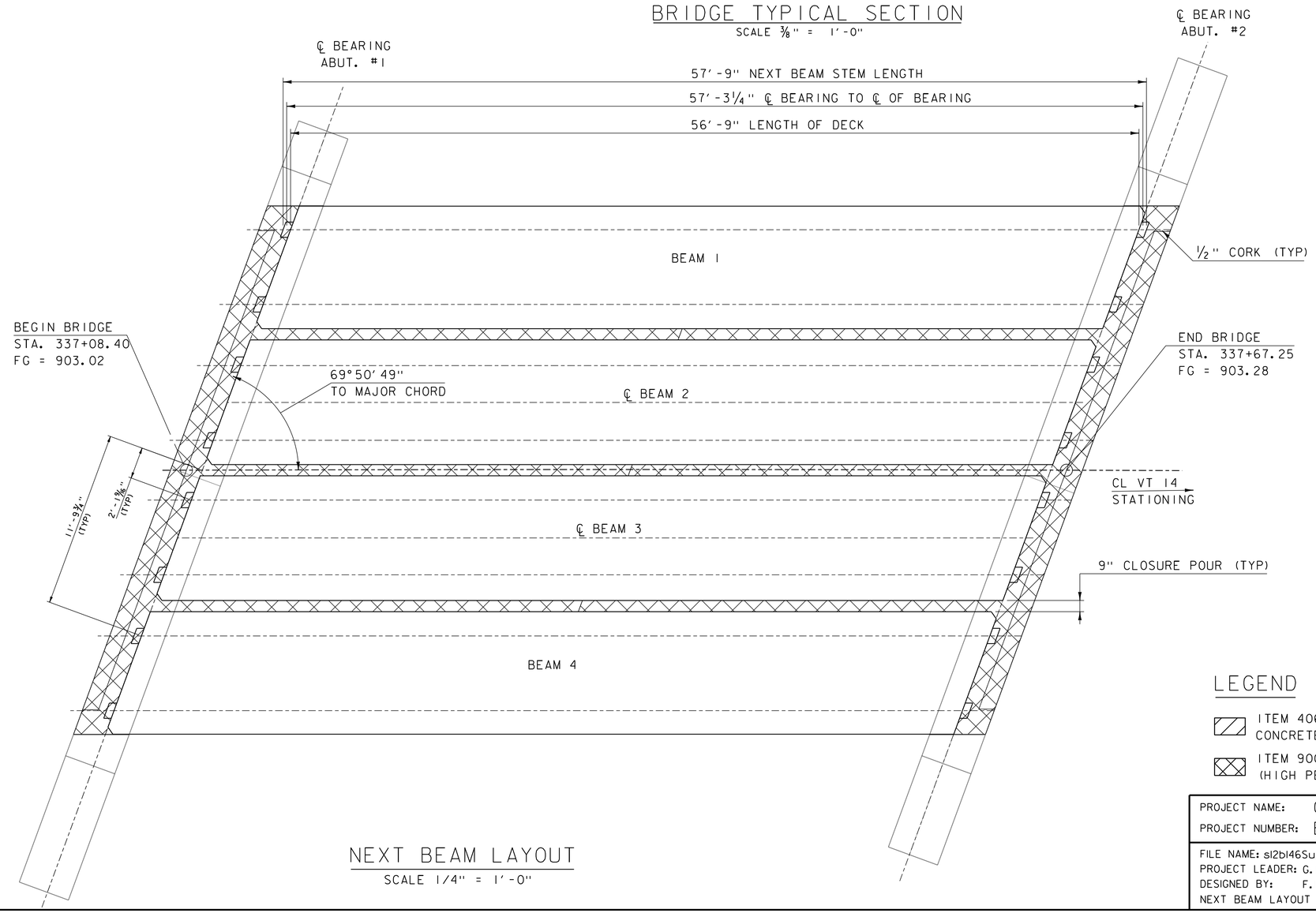

NEXT BEAM LAYOUT

SCALE 1/4" = 1'-0"

LEGEND

ITEM 406.36 SUPERPAVE BITUMINOUS CONCRETE PAVEMENT (TYPE IVB)

ITEM 900.608 SPECIAL PROVISION (HIGH PERFORMANCE CONCRETE, RAPID SET) (FPQ)

PROJECT NAME: CALAIS	
PROJECT NUMBER: BHF 037-2(11)	
FILE NAME: s12b146Sup.dgn	PLOT DATE: 02-JUN-2020
PROJECT LEADER: G. LAROCHE	DRAWN BY: G. ROKES
DESIGNED BY: F. BARROWS	CHECKED BY: A. LEMIEUX
NEXT BEAM LAYOUT	SHEET 110 OF 134

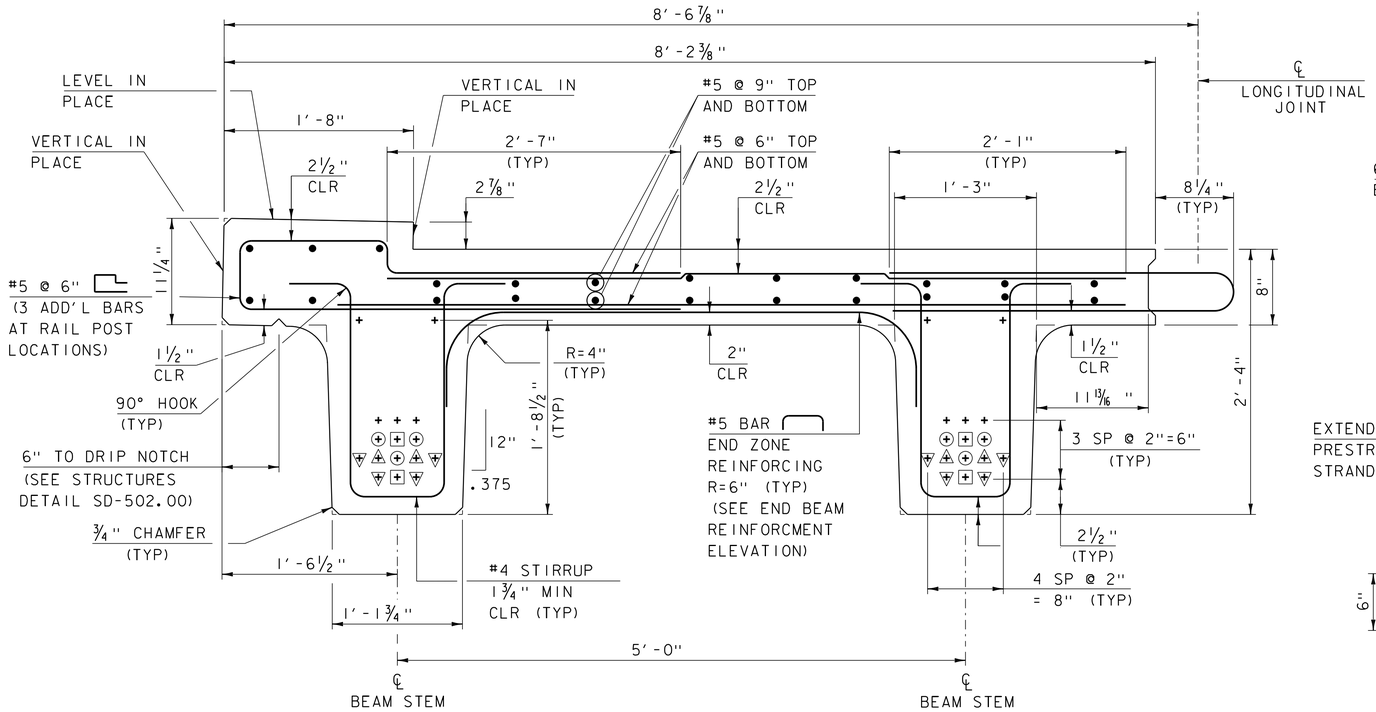

BEAM 1&4

SCALE 1 1/2"=1'-0

NOTE: BEAM 4 IS A MIRROR IMAGE OF BEAM 1

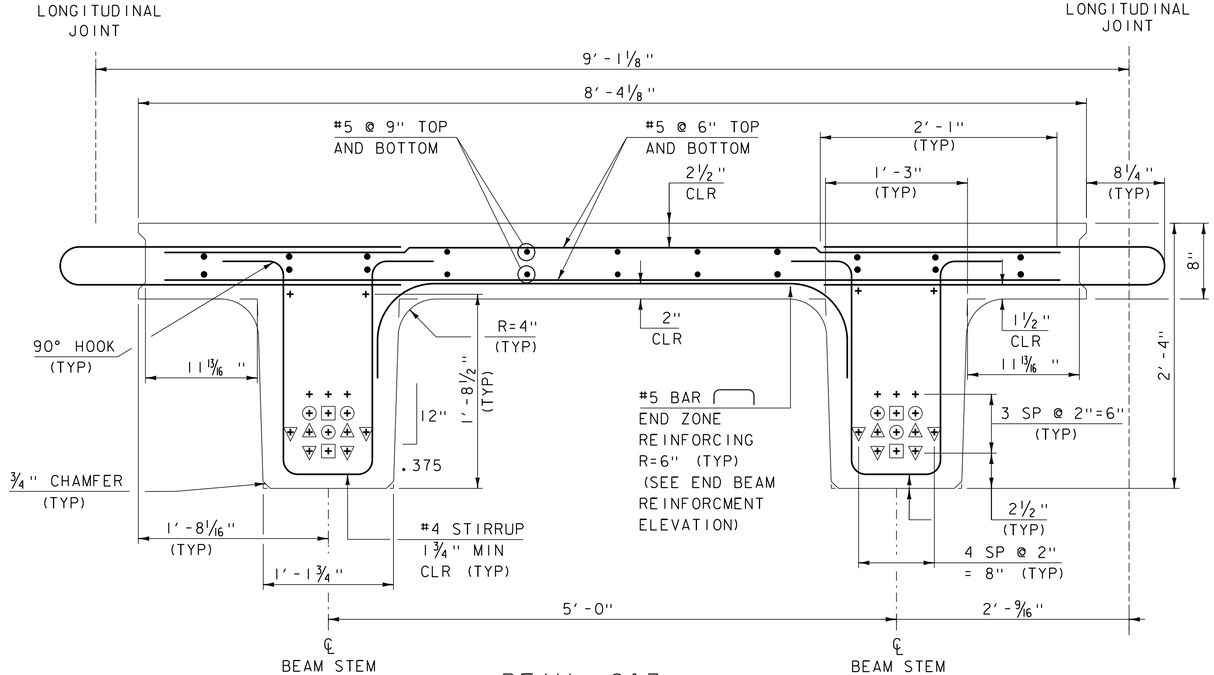

BEAM 2&3

SCALE 1 1/2"=1'-0

NOTE: TYPICAL DECK REINFORCEMENT NOT SHOWN FOR CLARITY

* INCLUDE ADDITIONAL STIRRUPS AND DECREASE SPACING TO 6" FOR A MAXIMUM OF 2 SPACES WHERE STRAND DEBONDING IS TERMINATED.

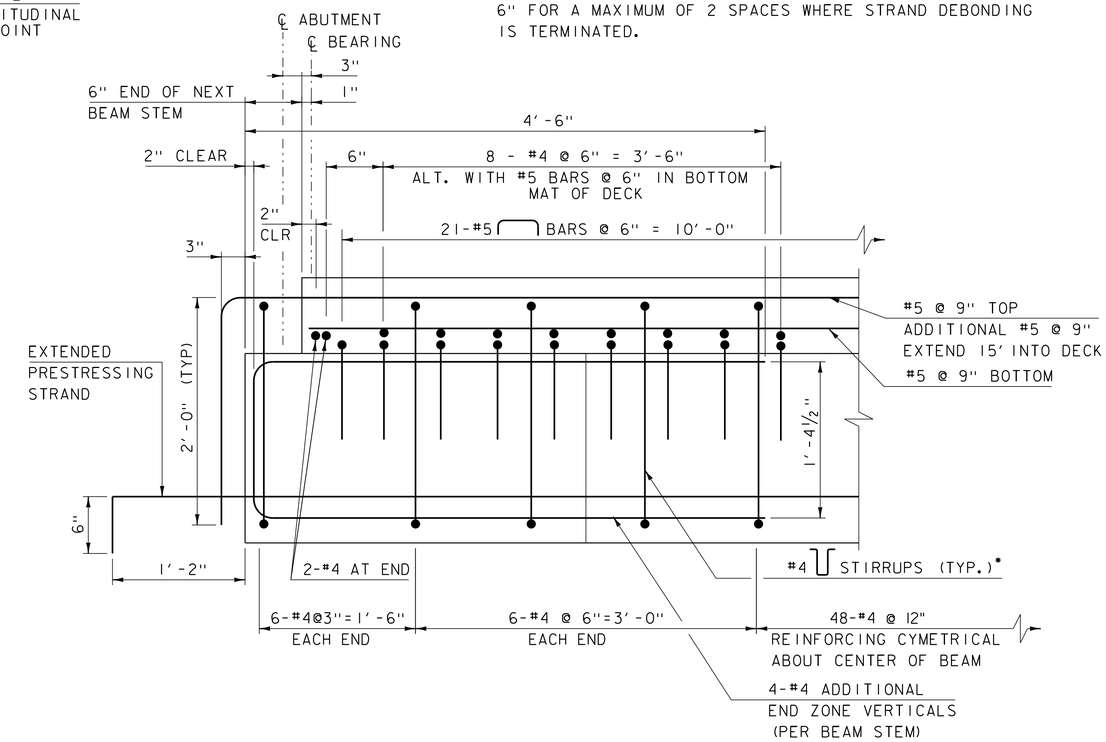

BEAM END REINFORCEMENT ELEVATION

SCALE 1 1/2"=1'-0

PRESTRESSING NOTES:

+ - DENOTES STRAIGHT 0.60" DIAMETER FULLY BONDED PRESTRESSING STRANDS

- DENOTES STRANDS DEBONDED FOR 0'-6" AT EACH END OF BEAM

- DENOTES STRANDS DEBONDED FOR 4'-0" AT EACH END OF BEAM

- DENOTES STRANDS DEBONDED FOR 8'-0" AT EACH END OF BEAM

- STRAND EXTENDED FROM BEAM STEM 1'-8" (TYP.)

NOTES:

* LEAVE THREE STRANDS LONG PER STEM AS INDICATED. TIE STRANDS TO CLOSURE POUR REINFORCING. SLEEVES FOR PERMANENT BENDING OF THE PRESTRESSING STRANDS WILL NOT BE ALLOWED INSIDE THE CLOSURE POUR.

3" CLEAR, UNLESS OTHERWISE SPECIFIED ON THE PLANS
2'-7" NUMBER 5 BAR LAP LENGTH
2'-1" NUMBER 4 BAR LAP LENGTH

PROJECT NAME: CALAIS	
PROJECT NUMBER: BHF 037-2(11)	
FILE NAME: s12b146Sup.dgn	PLOT DATE: 02-JUN-2020
PROJECT LEADER: G. LAROCHE	DRAWN BY: G. ROKES
DESIGNED BY: F. BARROWS	CHECKED BY: A. LEMIEUX
NEXT BEAM DETAILS 1	SHEET 111 OF 134

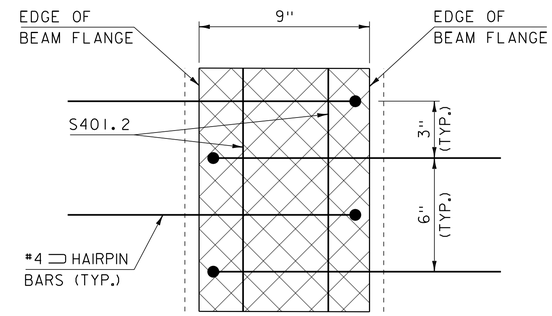

CLOSURE POUR PARTIAL PLAN

SCALE: 3" = 1'-0"

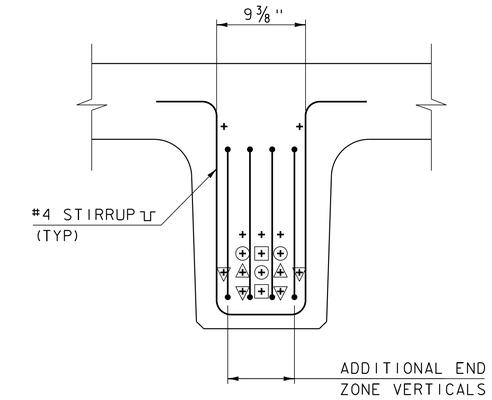

BEAM END SECTION

SCALE: 1 1/2" = 1'-0"

NOTE: DECK REINFORCING NOT SHOWN

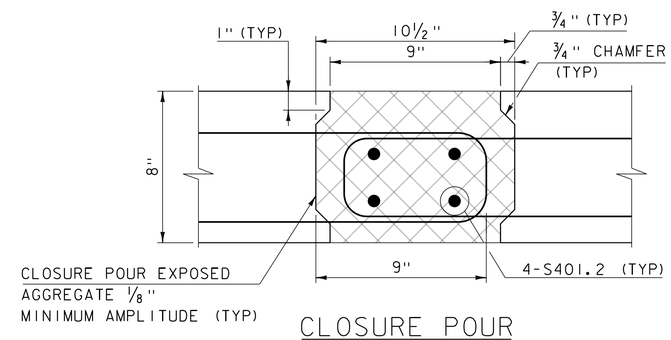

CLOSURE POUR DETAIL SECTION

SCALE: 3" = 1'-0"

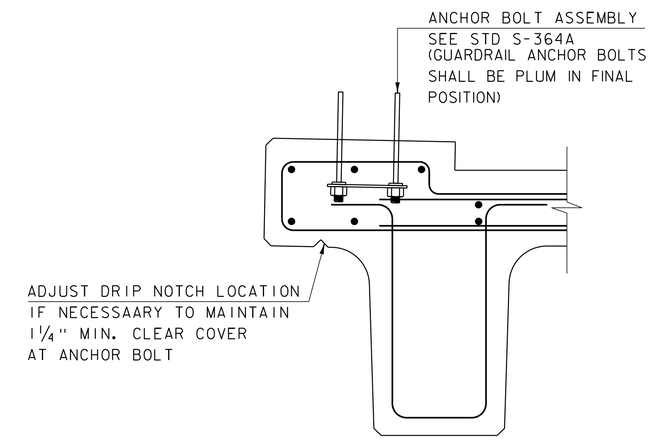

CURB SECTION DETAIL

SCALE: 1 1/2" = 1'-0"

PRESTRESSING NOTES:

+ - DENOTES STRAIGHT 0.60" DIAMETER FULLY BONDED PRESTRESSING STRANDS

⊽ - DENOTES STRANDS DEBONDED FOR 0'-6" AT EACH END OF BEAM

⊞ - DENOTES STRANDS DEBONDED FOR 4'-0" AT EACH END OF BEAM

⊼ - DENOTES STRANDS DEBONDED FOR 8'-0" AT EACH END OF BEAM

⊕ - STRAND EXTENDED FROM BEAM STEM 1'-8" (TYP.)

NOTES:

* LEAVE THREE STRANDS LONG PER STEM AS INDICATED. TIE STRANDS TO CLOSURE POUR REINFORCING. SLEEVES FOR PERMANENT BENDING OF THE PRESTRESSING STRANDS WILL NOT BE ALLOWED INSIDE THE CLOSURE POUR.

3" CLEAR, UNLESS OTHERWISE SPECIFIED ON THE PLANS
2'-7" NUMBER 5 BAR LAP LENGTH
2'-1" NUMBER 4 BAR LAP LENGTH

PROJECT NAME: CALAIS	
PROJECT NUMBER: BHF 037-2(11)	
FILE NAME: s12b146Sup.dgn	PLOT DATE: 02-JUN-2020
PROJECT LEADER: G. LAROCHE	DRAWN BY: G. ROKES
DESIGNED BY: F. BARROWS	CHECKED BY: A. LEMIEUX
NEXT BEAM DETAILS 2	SHEET 112 OF 134

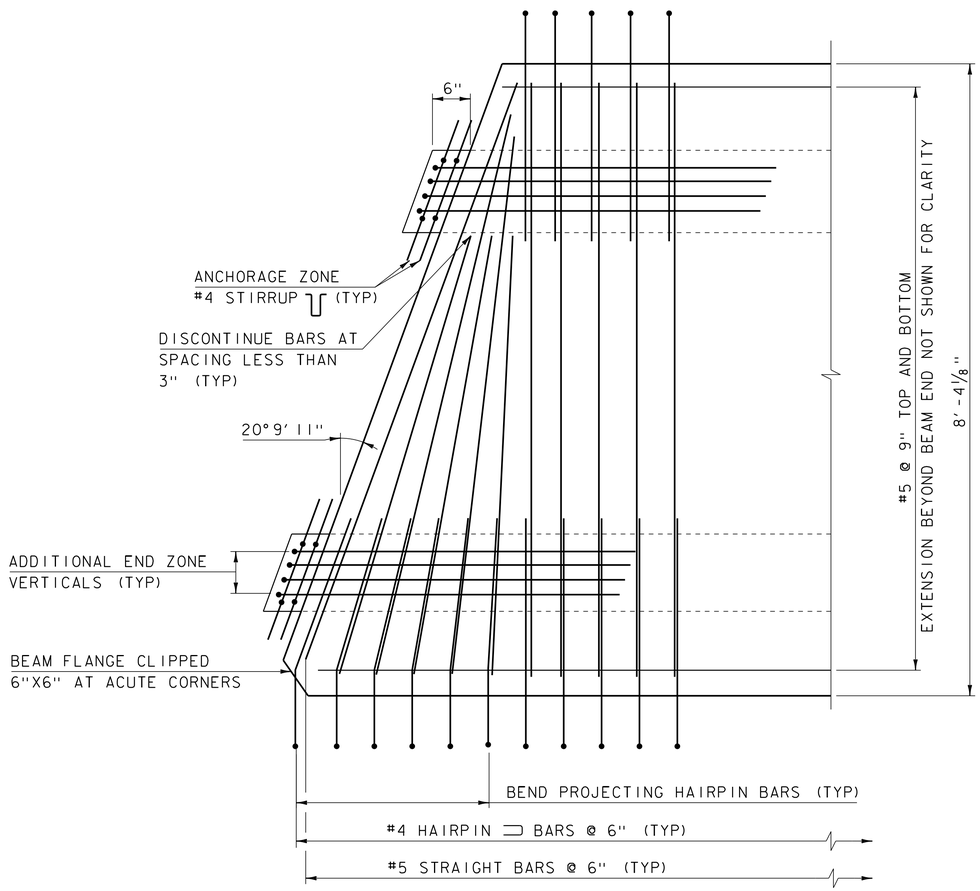

BEAM 2&3 SKEWED END REINFORCING
BEAM PARTIAL PLAN
SCALE 1"=1'-0"

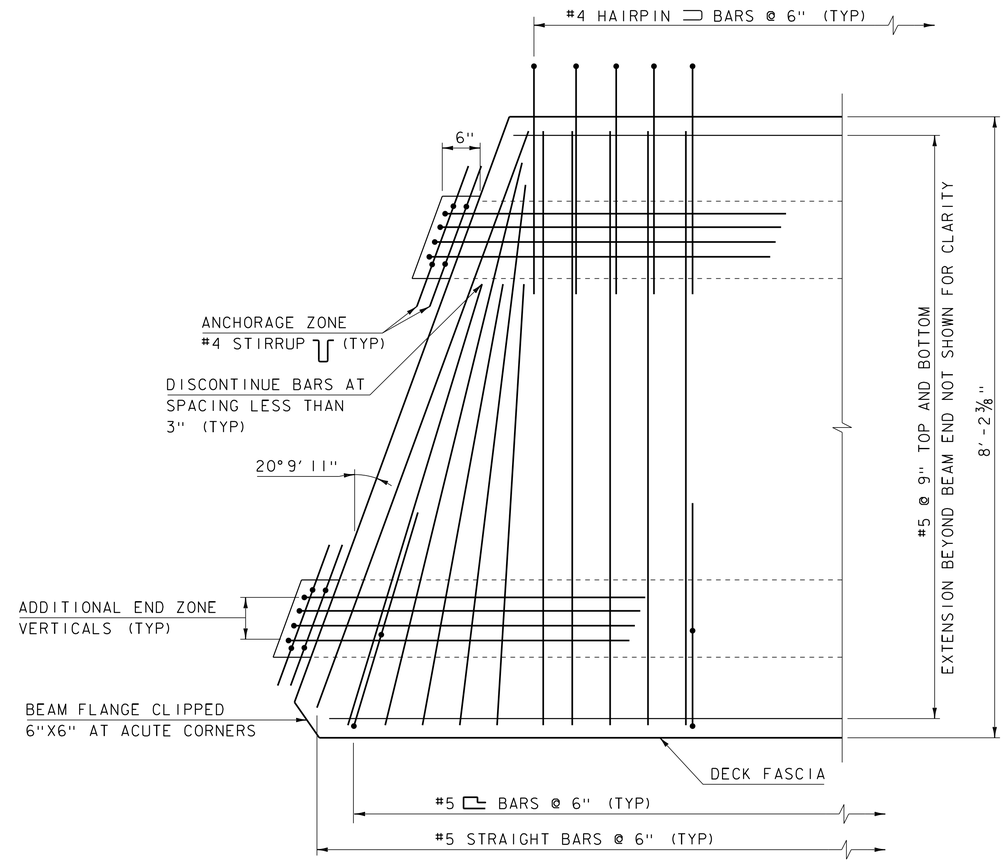

BEAM 1&4 SKEWED END REINFORCING
BEAM PARTIAL PLAN
SCALE 1"=1'-0"

NOTES:

- LEAVE THREE STRANDS LONG PER STEM AS INDICATED. TIE STRANDS TO CLOSURE POUR REINFORCING. SLEEVES FOR PERMANENT BENDING OF THE PRESTRESSING STRANDS WILL NOT BE ALLOWED INSIDE THE CLOSURE POUR.

  3" CLEAR, UNLESS OTHERWISE SPECIFIED ON THE PLANS
  2'-7" NUMBER 5 BAR LAP LENGTH
  2'-1" NUMBER 4 BAR LAP LENGTH

PRESTRESSING NOTES:

+ - DENOTES STRAIGHT 0.60" DIAMETER FULLY BONDED PRESTRESSING STRANDS

- DENOTES STRANDS DEBONDED FOR 0'-6" AT EACH END OF BEAM

- DENOTES STRANDS DEBONDED FOR 4'-0" AT EACH END OF BEAM

- DENOTES STRANDS DEBONDED FOR 8'-0" AT EACH END OF BEAM

- STRAND EXTENDED FROM BEAM STEM 1'-8" (TYP.)

PROJECT NAME: CALAIS	
PROJECT NUMBER: BHF 037-2(11)	
FILE NAME: s12b146Sup.dgn	PLOT DATE: 02-JUN-2020
PROJECT LEADER: G. LAROCHE	DRAWN BY: G. ROKES
DESIGNED BY: F. BARROWS	CHECKED BY: A. LEMIEUX
NEXT BEAM DETAILS 3	SHEET 113 OF 134

	NOMENCLATURE	SPACING	CUT TO FIT
1	A511.2	12"	YES
2	A512.2	12"	NO
3	A513.2	AS SHOWN	NO
4	A514.2	12"	NO
5	A503.2	AS SHOWN	NO
6	A504.2	AS SHOWN	NO
7	A505.2	AS SHOWN	YES
8	A506.2	AS SHOWN	NO
9	A801.2	18"	NO

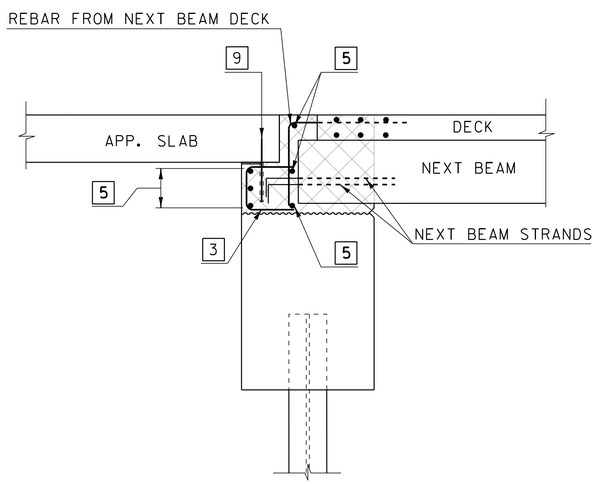

ABUTMENT CLOSURE
REINFORCING AT BRIDGE SEAT
SCALE ½" = 1'-0"

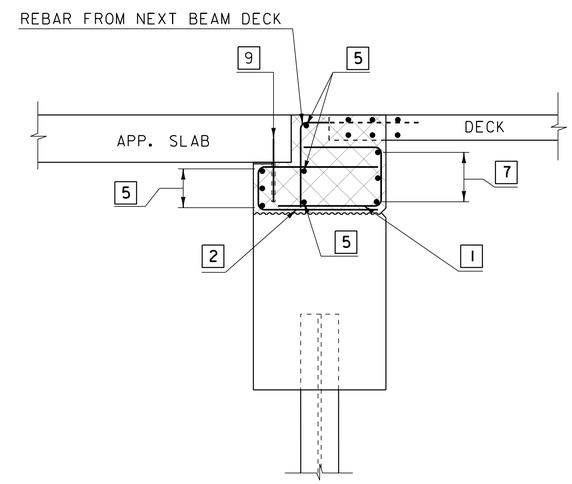

ABUTMENT CLOSURE
REINFORCING BETWEEN
NEXT BEAM STEMS
SCALE ½" = 1'-0"

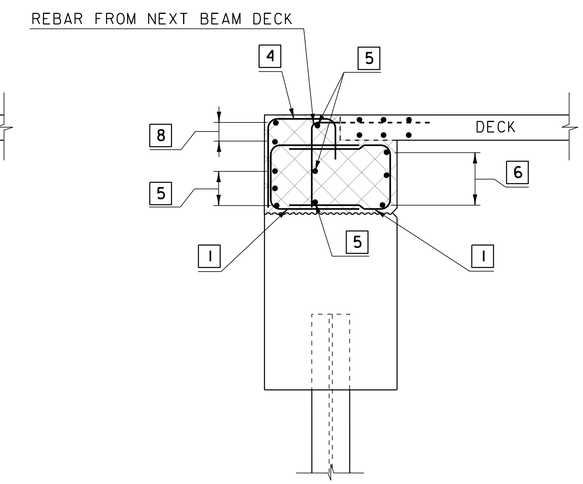

ABUTMENT CLOSURE REINFORCING
BETWEEN NEXT BEAM STEM
AND ABUTMENT CHECK WALL
SCALE ½" = 1'-0"

NOTES:
EF = EACH FACE
NF = NEAR FACE
FF = FAR FACE
3" CLEAR UNLESS OTHERWISE SPECIFIED ON THE PLANS
▲ = CUT TO FIT
CLOSURE POUR DETAILS FOR ABUTMENT 2 SIMILAR TO THE DETAILS ABOVE FOR ABUTMENT 1.

PROJECT NAME: CALAIS
PROJECT NUMBER: BHF 037-2(11)

FILE NAME: Sub abut closure reinf.dgn
PROJECT LEADER: G. LAROCHE
DESIGNED BY: F. BARROWS
BEAM END CLOSURE POUR DETAILS

PLOT DATE: 02-JUN-2020
DRAWN BY: G. ROKES
CHECKED BY: A. LEMIEUX
SHEET 114 OF 134

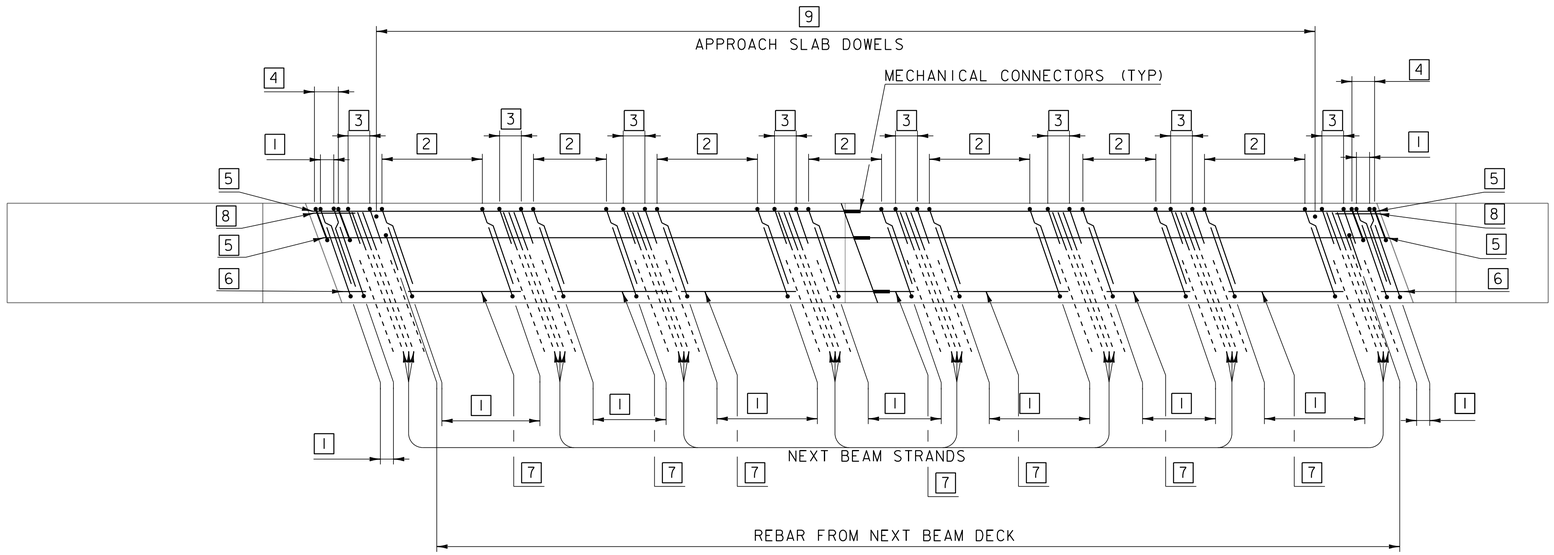

ABUTMENT 1 PLAN

SCALE: 3/8" = 1'-0"

	NOMENCLATURE	SPACING	CUT TO FIT
1	A511.2	12"	YES
2	A512.2	12"	NO
3	A513.2	AS SHOWN	NO
4	A514.2	12"	NO
5	A503.2	AS SHOWN	NO
6	A504.2	AS SHOWN	NO
7	A505.2	AS SHOWN	YES
8	A506.2	AS SHOWN	NO
9	A801.2	18"	NO

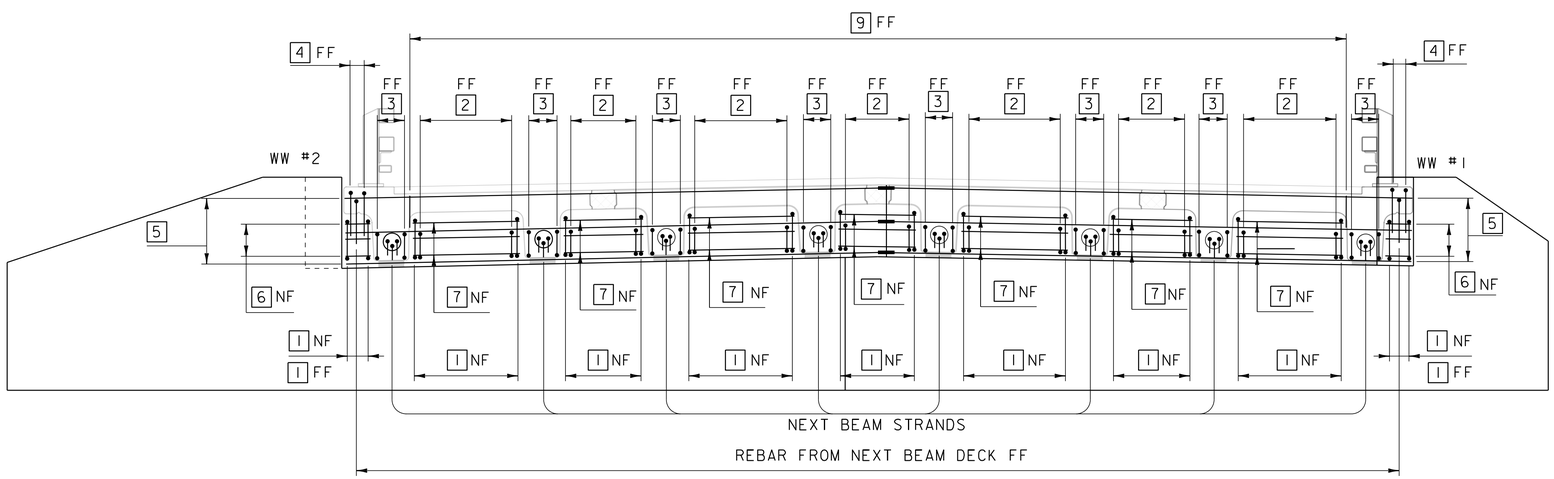

ABUTMENT 1 ELEVATION

SCALE: 3/8" = 1'-0"

NOTES:
EF = EACH FACE
NF = NEAR FACE
FF = FAR FACE
3" CLEAR UNLESS OTHERWISE SPECIFIED ON THE PLANS
▲ = CUT TO FIT
CLOSURE POUR DETAILS FOR ABUTMENT 2 SIMILAR TO THE DETAILS FOR ABUTMENT 1.

PROJECT NAME: CALAIS
PROJECT NUMBER: BHF 037-2(11)

FILE NAME: s12b146Sub abut closure.dgn
PROJECT LEADER: G. LAROCHE
DESIGNED BY: F. BARROWS
BEAM END CLOSURE POUR

PLOT DATE: 02-JUN-2020
DRAWN BY: G. ROKES
CHECKED BY: A. LEMIEUX
SHEET 115 OF 134

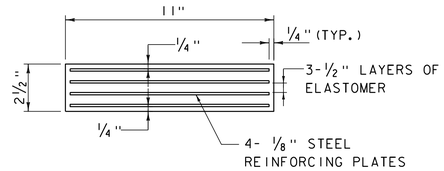

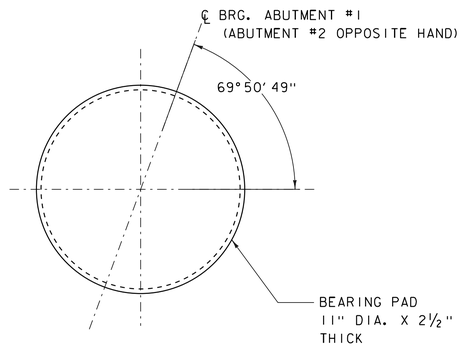

ELASTOMERIC BEARING DETAIL

SCALE: 3"=1'-0"

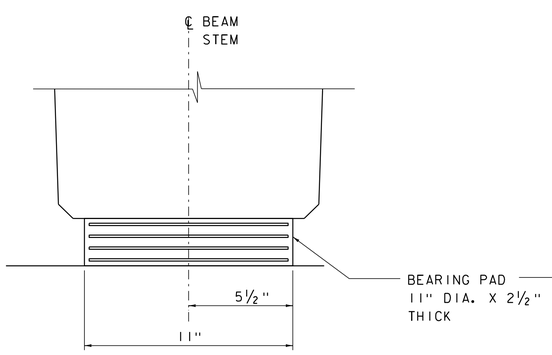

FRONT ELEVATION

SCALE: 3"=1'-0"

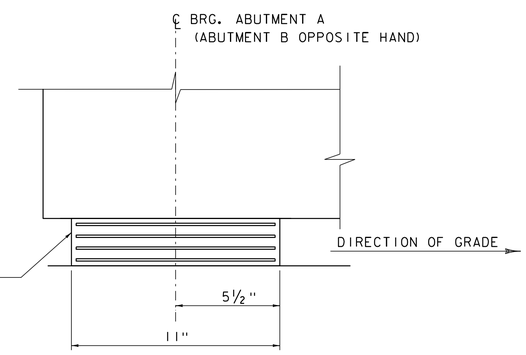

SIDE ELEVATION

SCALE: 3"=1'-0"

BEARING NOTES:

1. THE ELASTOMER WAS DESIGNED WITH A SHEAR MODULUS OF 165 PSI +/- 20% AND A DUROMETER HARDNESS OF 60.

2. SHIMS MAY BE REQUIRED TO ADJUST FOR FINAL GRADE AND CAMBER TOLERANCES. THE CONTRACTOR SHALL HAVE ONE 1/4" THICK STEEL SHIM AVAILABLE PER BEARING PAD. THE SHIMS SHALL BE 1/4" LARGER THAN THE ELASTOMERIC BEARING ON ALL SIDES. THE COST OF THE SHIMS WILL BE INCLUDED IN THE UNIT PRICE BID FOR ITEM 531.17 "BEARING DEVICE ASSEMBLY, STEEL REINFORCED ELASTOMERIC PAD".

3. DESIGN SERVICE LOADS PER BEARING: (DESIGN METHOD A)
   MAX DEAD LOAD: 31.00 KIP
   MAX LIVE LOAD: 38.91 KIP

PROJECT NAME: CALAIS	
PROJECT NUMBER: BHF 037-2(11)	
FILE NAME: s12b146brg.dgn	PLOT DATE: 02-JUN-2020
PROJECT LEADER: G. LAROCHE	DRAWN BY: M.LONGSTREET
DESIGNED BY: F.BARROWS	CHECKED BY: G.LAROCHE
ELASTOMERIC BEARING DETAILS	SHEET 116 OF 134

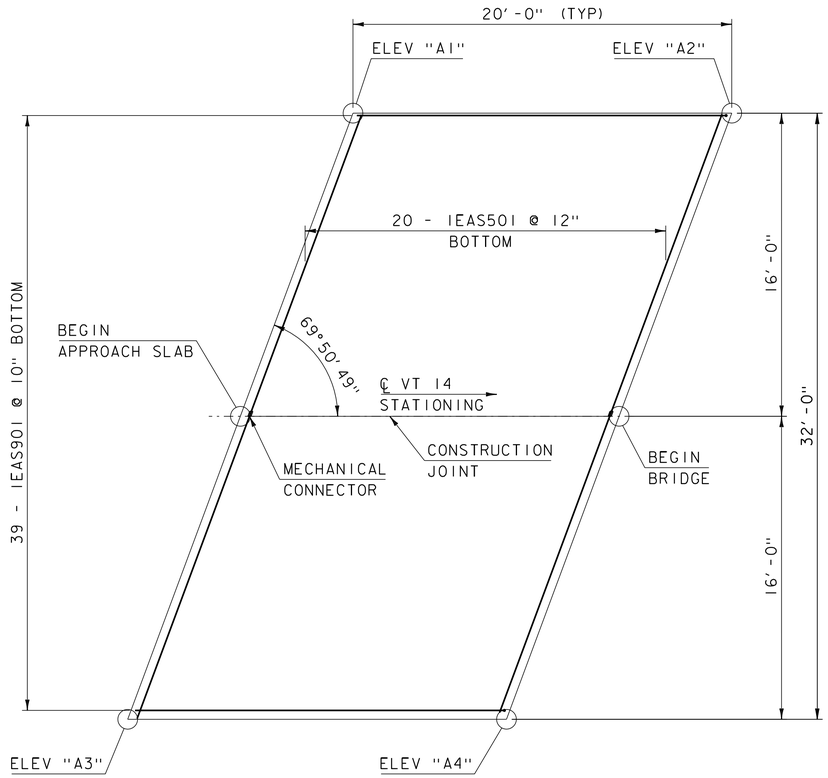

APPROACH SLAB 1

SCALE: 1/4" = 1'-0"

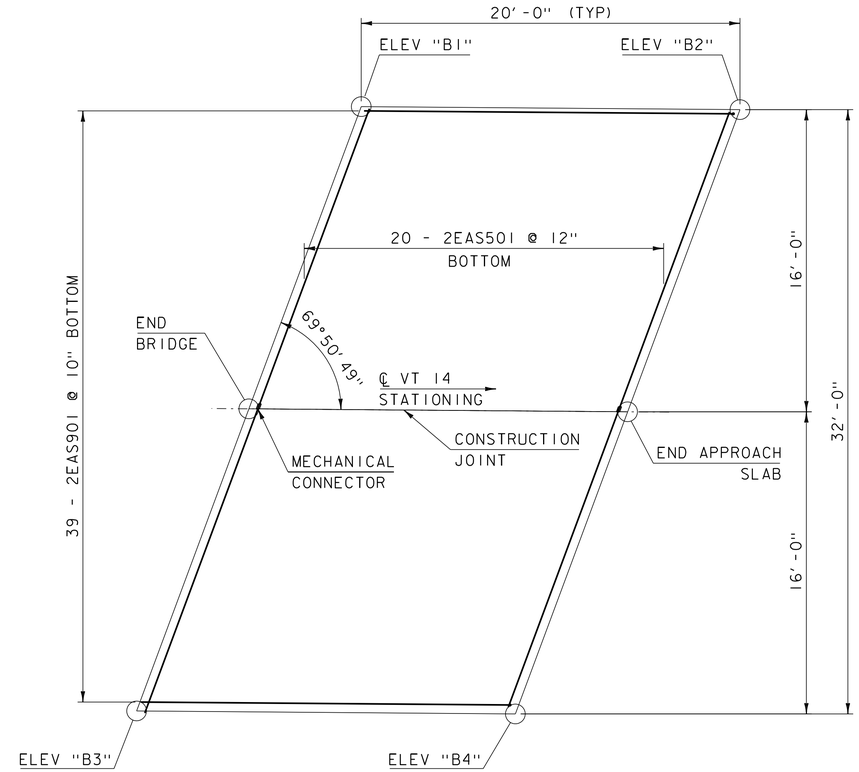

APPROACH SLAB 2

SCALE: 1/4" = 1'-0"

	STATION	OFFSET	ELEVATION
A1	336+94.35	16.00' LT	902.35
A2	337+14.31	16.00' LT	902.49
BEGIN AS 1	336+88.40	0.00'	902.61
BEGIN BRIDGE	337+08.40	0.00'	902.77
A3	336+82.42	16.00' RT	902.24
A4	337+02.69	16.00' RT	902.41
B1	337+73.06	16.00' LT	902.72
B2	337+93.06	16.00' LT	902.72
END BRIDGE	337+67.25	0.00'	903.03
END AS 2	337+87.25	0.00'	903.04
B3	337+61.43	16.00' RT	902.70
B4	337+81.46	16.00' RT	902.72

NOTES:

1. COMPACT THE SUBBASE IN THE AREA UNDER THE APPRAOCH SLAB TO A SMOOTH SURFACE.
2. MATERIAL FOR THE POLYETHELENE SHEETING SHALL MEET THE REQUIREMENTS OF SUBSECTION (725.01C) OF THE STANDARD SPECIFICATIONS. PLACE THE SHEETING ON TOP OF THE FINISHED SUBBASE FOR THE FULL LENGTH AND WIDTH OF THE APPROACH SLAB, AS SHOWN IN THE APPROACH SLAB DETAIL. LAP SHEETING AT LEAST 24 INCHES. PAYMENT INCIDENTAL TO ITEM 900.608 "SPECIAL PROVISION (HIGH PERFORMANCE CONCRETE, CLASS B)".
3. PAYMENT FOR BOND BREAKER SHALL BE INCLUDED IN THE UNIT PRICE BID FOR PAY ITEM 900.608 "SPECIAL PROVISION (HIGH PERFORMANCE CONCRETE, CLASS B)".
4. ITEM 507.19 MECHANICAL BAR CONNECTOR #5 EPOXY FOR 1EA501 AND 2EA501

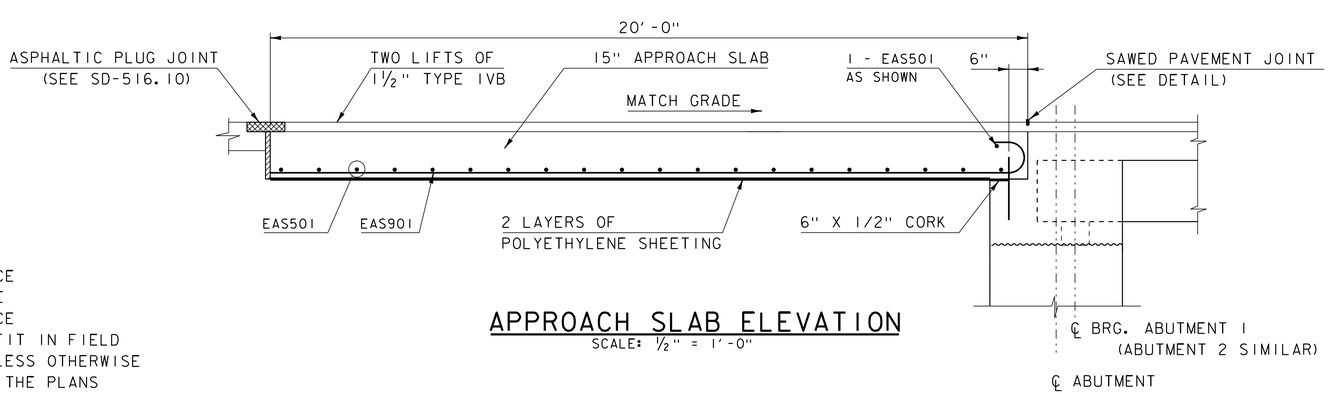

APPROACH SLAB ELEVATION

SCALE: 1/2" = 1'-0"

NOTES:
NF = NEAR FACE
FF = FAR FACE
EF = EACH FACE
▲ = CUT TO FIT IN FIELD
3" CLEAR, UNLESS OTHERWISE SPECIFIED ON THE PLANS
2'-6" SPLICE LENGTH UNLESS OTHERWISE SPECIFIED

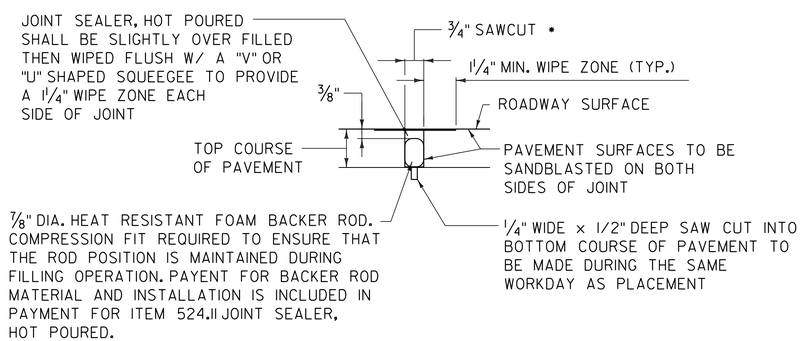

SAWED PAVEMENT JOINT DETAIL

NOT TO SCALE

1. JOINT IS TO BE LOCATED ACCURATELY BY STRING LINING, OR OTHER MEANS, PRIOR TO PAVING, SO THAT THE SAW CUTS WILL BE MADE DIRECTLY OVER THE END OF THE CONCRETE DECK. JOINT SHALL BE CUT DRY IN A SINGLE PASS AND BE SEALED WITHIN 24 HOURS OR PRIOR TO EXPOSURE TO TRAFFIC. JOINT SHALL BE CLEANED PRIOR TO APPLYING THE JOINT SEALER.
2. SAWED PAVEMENT JOINTS SHALL BE LOCATED BETWEEN THE APPROACH SLABS AND EACH END OF THE BRIDGE AND BETWEEN THE APPROACH SLABS AND ANY PAVED APRONS FOR DRIVES

* SAWED PAVEMENT JOINT AT APRON SHALL BE CUT TO FULL PAVEMENT DEPTH.

PROJECT NAME: CALAIS
PROJECT NUMBER: BHF 037-2(11)

FILE NAME: s12b146appslab.dgn
PROJECT LEADER: G. LAROCHE
DESIGNED BY: F. BARROWS
APPROACH SLAB DETAILS

PLOT DATE: 02-JUN-2020
DRAWN BY: S. COLEY
CHECKED BY: F. BARROWS
SHEET 117 OF 134

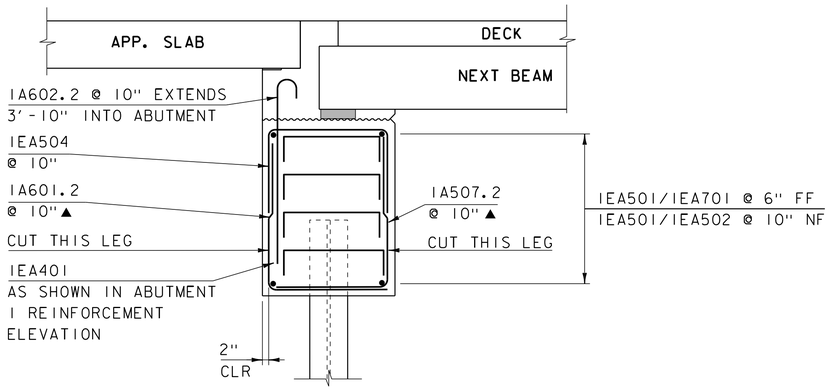

ABUTMENT 1 REINFORCING
AT BRIDGE SEAT
SCALE ½" = 1'-0"

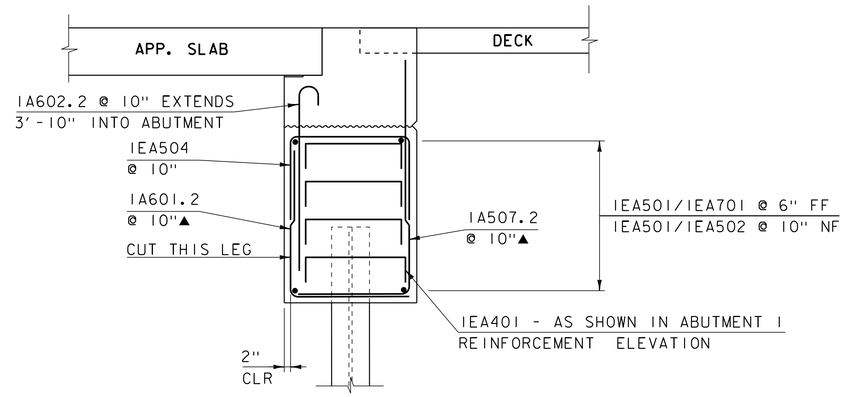

ABUTMENT 1 REINFORCING
BETWEEN NEXT BEAM STEMS
SCALE ½" = 1'-0"

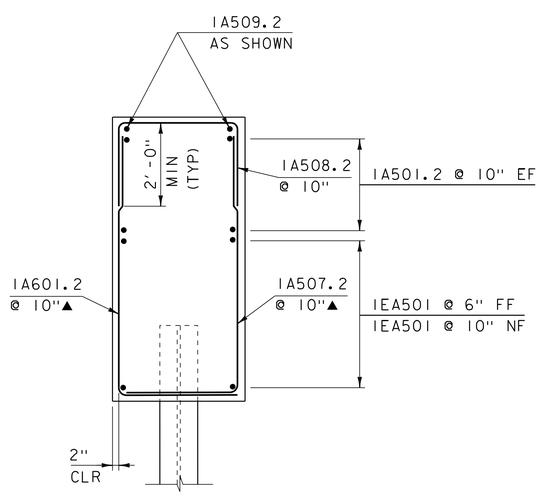

ABUTMENT REINFORCING
AT WINGWALL 1
SCALE ½" = 1'-0"

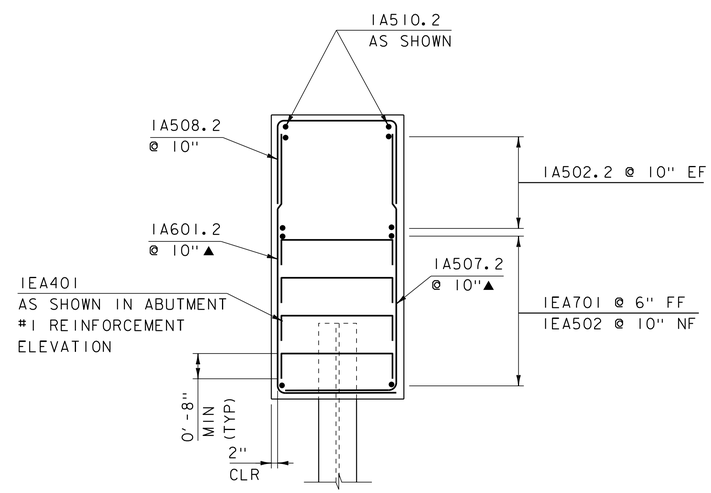

ABUTMENT REINFORCING
AT WINGWALL 2
SCALE ½" = 1'-0"

NOTES:
EF = EACH FACE
NF = NEAR FACE
FF = FAR FACE
3" CLEAR UNLESS OTHERWISE
SPECIFIED ON THE PLANS
▲ = CUT TO FIT

PROJECT NAME: CALAIS	
PROJECT NUMBER: BHF 037-2(11)	
FILE NAME: s12b146Sub abut 1 reinf.dgn	PLOT DATE: 02-JUN-2020
PROJECT LEADER: G. LAROCHE	DRAWN BY: S. COLEY
DESIGNED BY: F. BARROWS	CHECKED BY: A. LEMIEUX
ABUTMENT 1 REINFORCEMENT SECTIONS	SHEET 118 OF 134

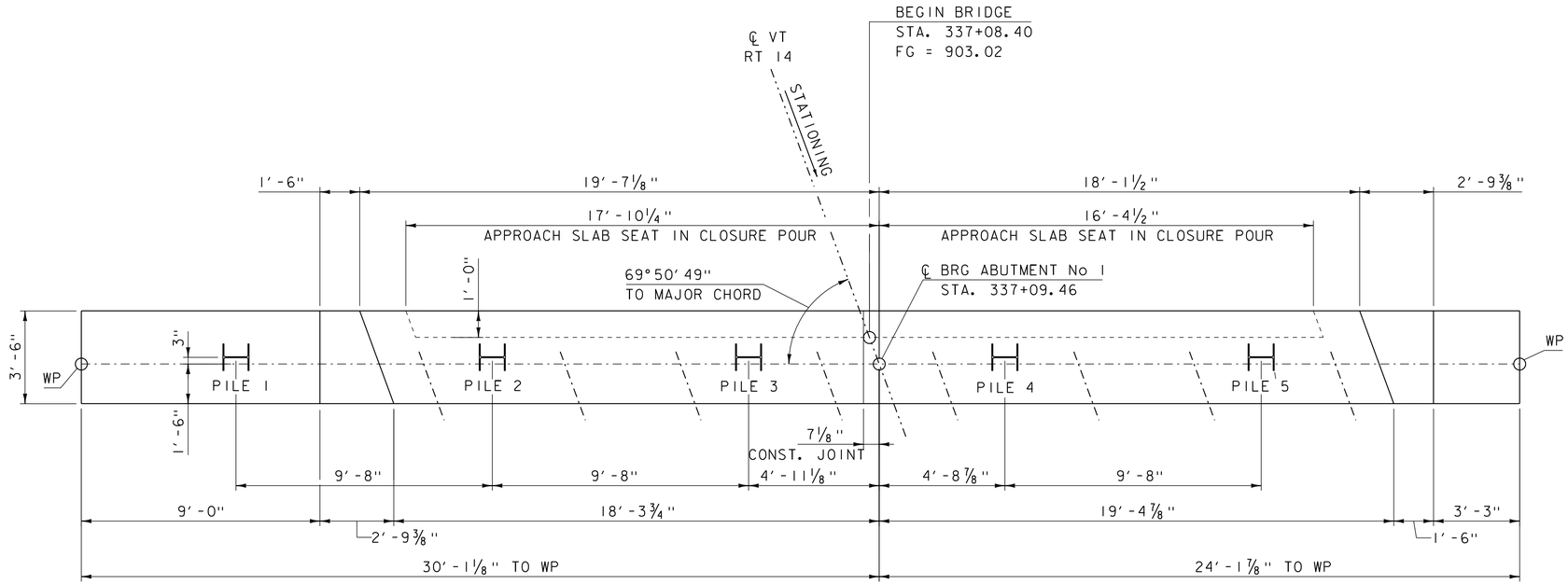

ABUTMENT 1 PLAN

SCALE: ⅜" = 1'-0"

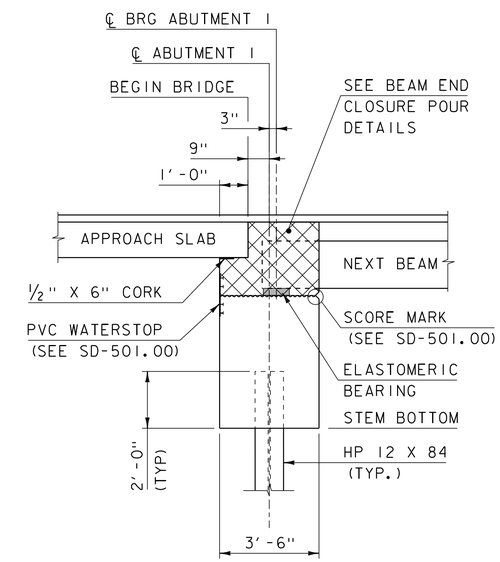

ABUTMENT TYPICAL SECTION

SCALE: ⅜" = 1'-0"

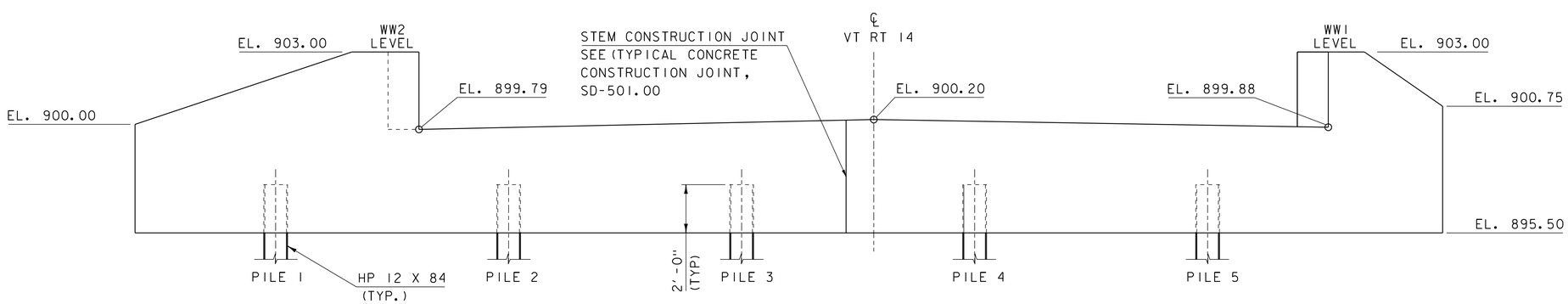

ABUTMENT 1 ELEVATION

SCALE: ⅜" = 1'-0"

NOTE: ELEVATIONS SHOWN ON THIS SHEET ARE LOCATED AT THE CENTERLINE OF BEARING.

PROJECT NAME: CALAIS	
PROJECT NUMBER: BHF 037-2(11)	
FILE NAME: s12b146Sub abut1.dgn	PLOT DATE: 02-JUN-2020
PROJECT LEADER: G. LAROCHE	DRAWN BY: G. ROKES
DESIGNED BY: F. BARROWS	CHECKED BY: A. LEMIEUX
ABUTMENT 1 PLAN	SHEET 119 OF 134

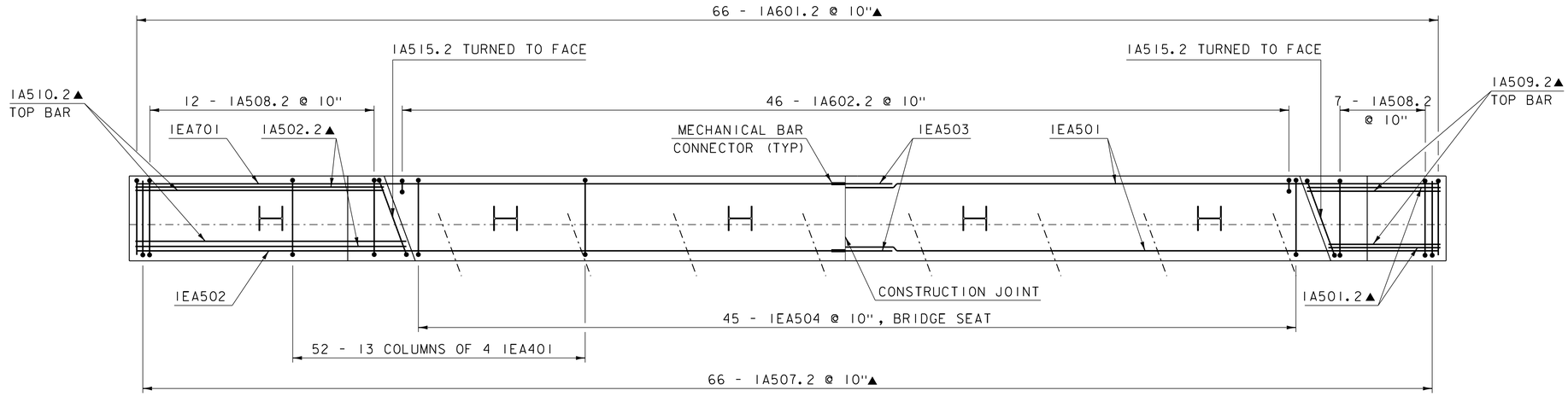

ABUTMENT 1 REINFORCEMENT PLAN

SCALE: 3/8" = 1'-0"

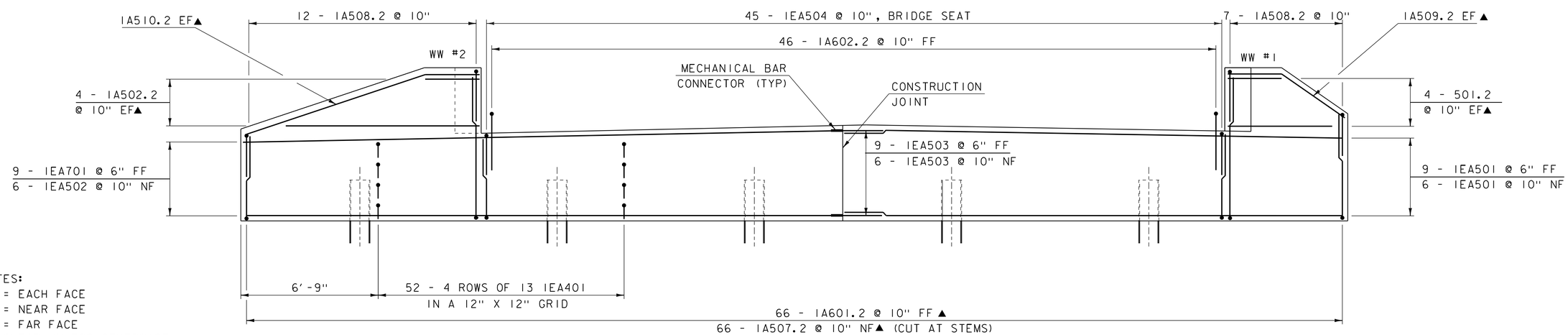

ABUTMENT 1 REINFORCEMENT ELEVATION

SCALE: 3/8" = 1'-0"

NOTES:
EF = EACH FACE
NF = NEAR FACE
FF = FAR FACE
3" CLEAR UNLESS OTHERWISE
SPECIFIED ON THE PLANS
▲ = CUT TO FIT
#5 = 3'-3" SPLICE LENGTH
#6 = 3'-10" SPLICE LENGTH
#7 = 5'-0" SPLICE LENGTH
ITEM 507.19 MECHANICAL BAR CONNECTOR
#5 EPOXY FOR 501

PROJECT NAME: CALAIS	
PROJECT NUMBER: BHF 037-2(11)	
FILE NAME: s12b146Sub abut 1 reinf.dgn	PLOT DATE: 02-JUN-2020
PROJECT LEADER: G. LAROCHE	DRAWN BY: S. COLEY
DESIGNED BY: F. BARROWS	CHECKED BY: A. LEMIEUX
ABUTMENT 1 REINFORCING	SHEET 120 OF 134

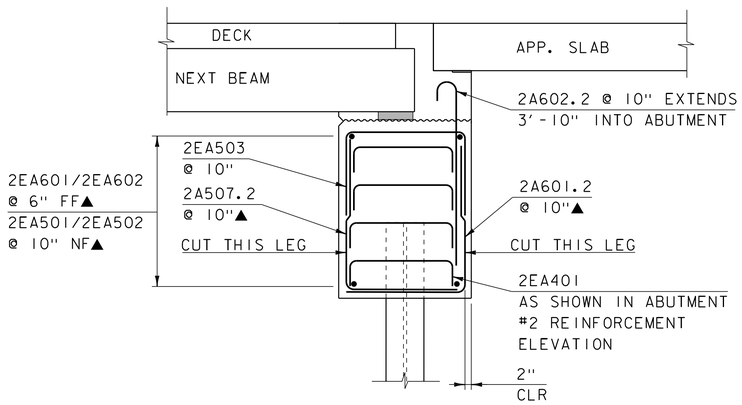

ABUTMENT 2 REINFORCING
AT BRIDGE SEAT

SCALE ½" = 1'-0"

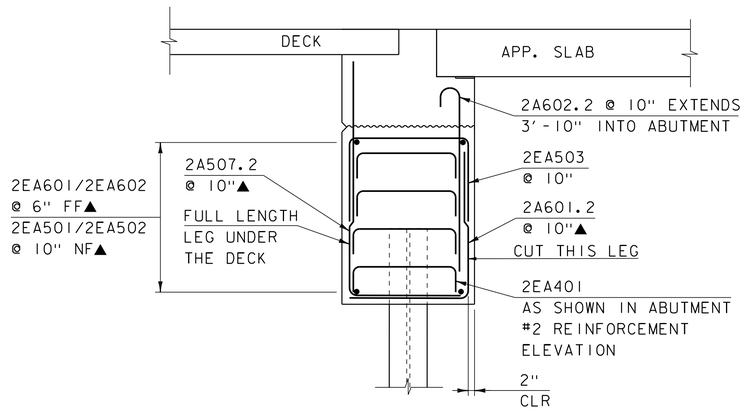

ABUTMENT 2 REINFORCING
BETWEEN NEXT BEAM STEMS

SCALE ½" = 1'-0"

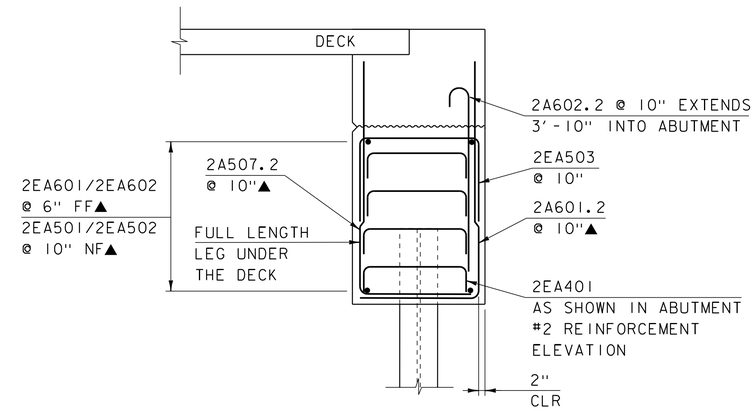

ABUTMENT 2 REINFORCING
BETWEEN NEXT BEAM STEM
AND ABUTMENT CHECK WALL

SCALE ½" = 1'-0"

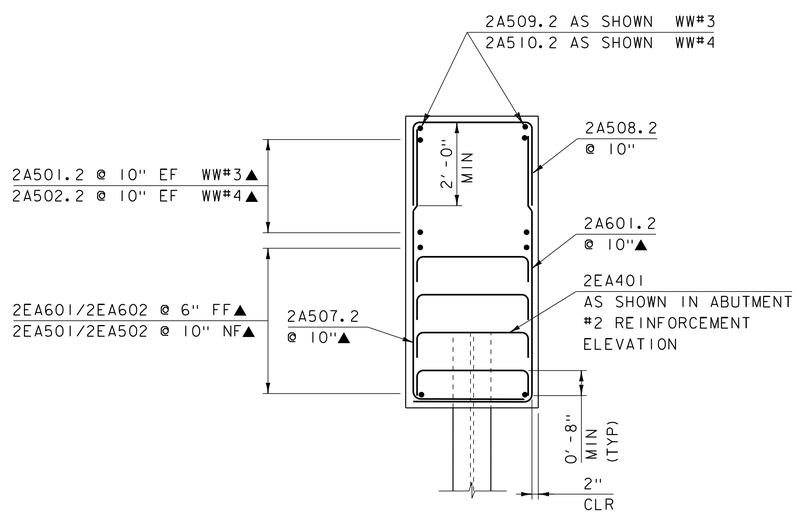

ABUTMENT REINFORCING AT
WINGWALLS 3 & 4

SCALE ½" = 1'-0"

NOTES:
EF = EACH FACE
NF = NEAR FACE
FF = FAR FACE
3" CLEAR UNLESS OTHERWISE
SPECIFIED ON THE PLANS
▲ = CUT TO FIT

PROJECT NAME: CALAIS	
PROJECT NUMBER: BHF 037-2(11)	
FILE NAME: sl2bl46Sub abut 2 reinf.dgn	PLOT DATE: 02-JUN-2020
PROJECT LEADER: G. LAROCHE	DRAWN BY: G. ROKES
DESIGNED BY: F. BARROWS	CHECKED BY: A. LEMIEUX
ABUTMENT 2 REINFORCEMENT SECTIONS	SHEET 121 OF 134

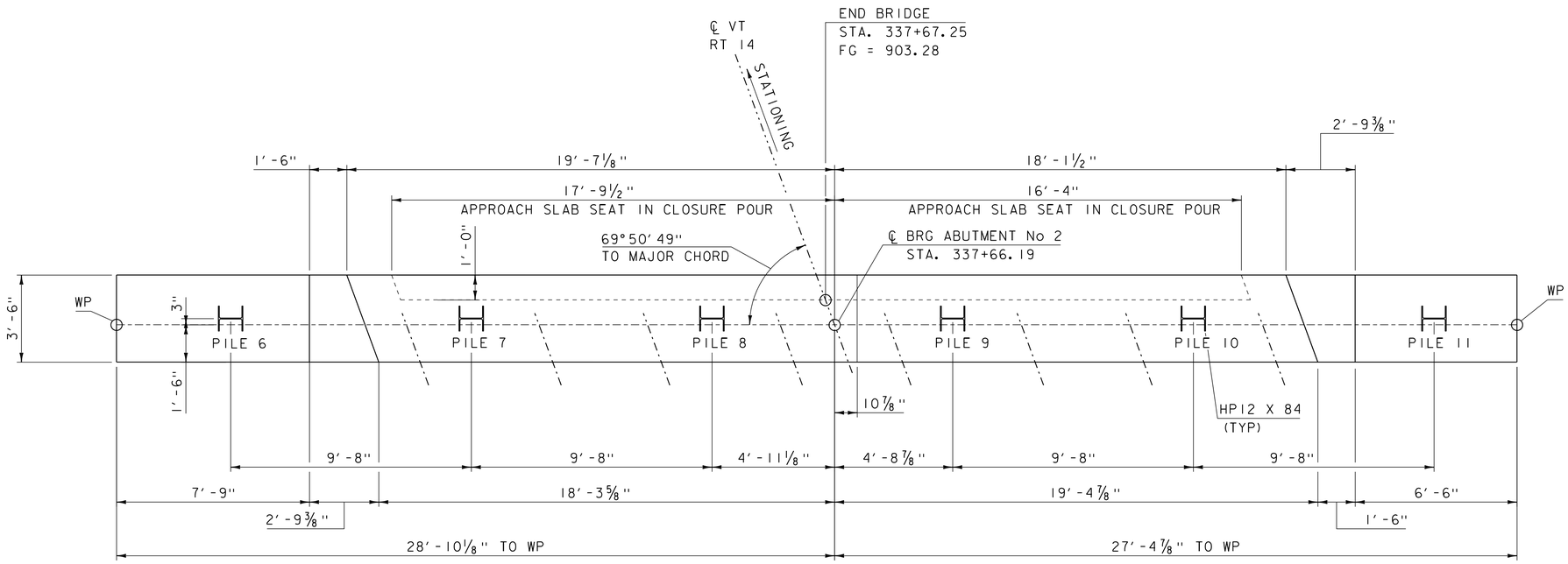

ABUTMENT 2 PLAN

SCALE: ⅜″ = 1′-0″

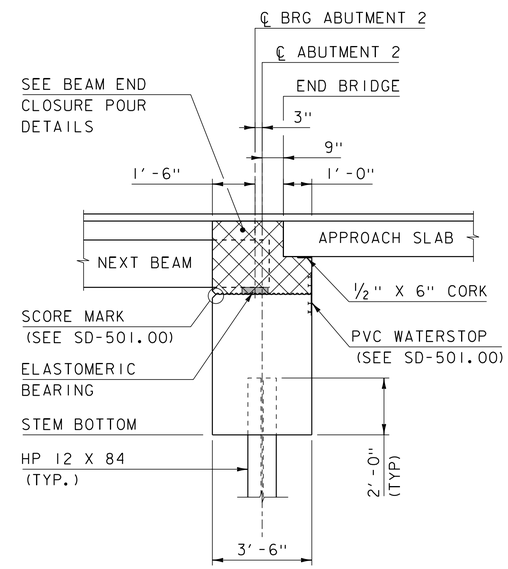

ABUTMENT TYPICAL SECTION

SCALE: ⅜″ = 1′-0″

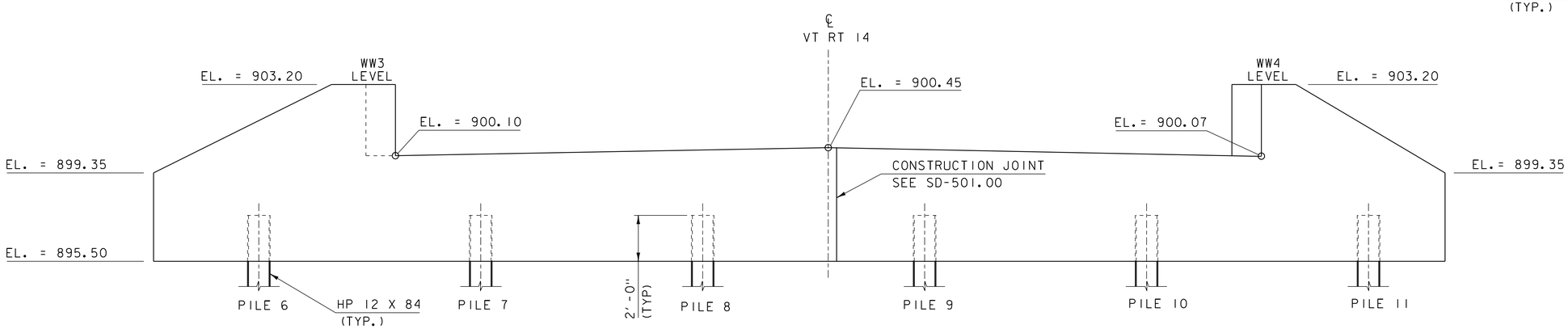

ABUTMENT 2 ELEVATION

SCALE: ⅜″ = 1′-0″

NOTE: ELEVATIONS SHOWN ON THIS SHEET ARE LOCATED AT THE CENTERLINE OF BEARING.

PROJECT NAME: CALAIS	
PROJECT NUMBER: BHF 037-2(II)	
FILE NAME: s12b146Sub abut2.dgn	PLOT DATE: 02-JUN-2020
PROJECT LEADER: G. LAROCHE	DRAWN BY: G. ROKES
DESIGNED BY: F. BARROWS	CHECKED BY: A. LEMIEUX
ABUTMENT 2 PLAN	SHEET 122 OF 134

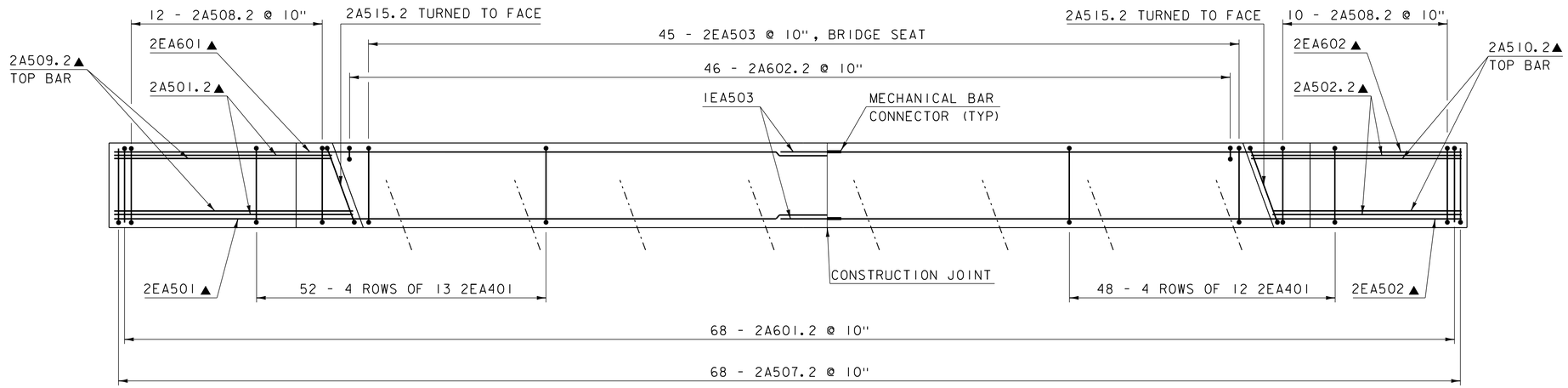

ABUTMENT 2 REINFORCING PLAN

SCALE: 3/8" = 1'-0"

9 - 1EA503 @ 6" FF
6 - 1EA503 @ 10" NF

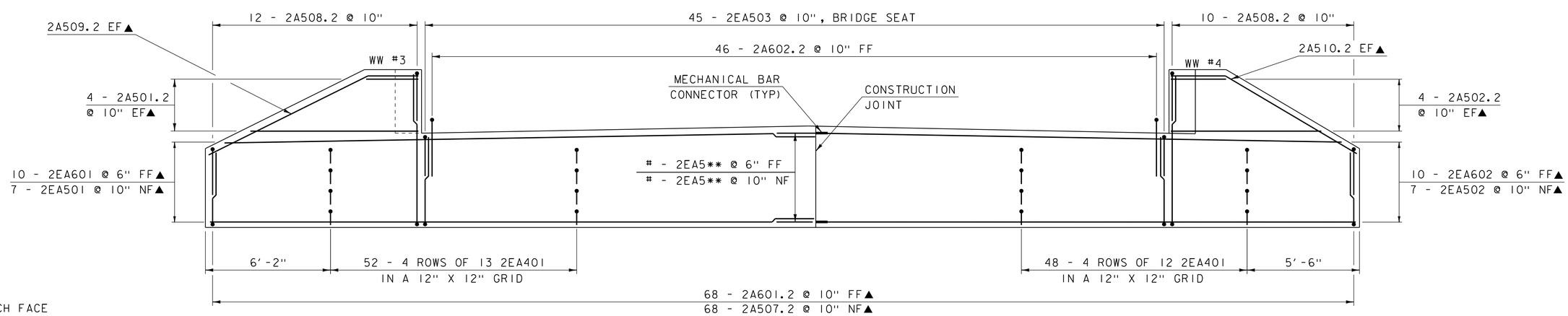

ABUTMENT 2 REINFORCING ELEVATION

SCALE: 3/8" = 1'-0"

NOTES:
EF = EACH FACE
NF = NEAR FACE
FF = FAR FACE
3" CLEAR UNLESS OTHERWISE
SPECIFIED ON THE PLANS
▲ = CUT TO FIT
#5 = 3'-3" SPLICE LENGTH
#6 = 3'-10" SPLICE LENGTH
#7 = 5'-0" SPLICE LENGTH
ITEM 507.19 MECHANICAL BAR CONNECTOR
#5 EPOXY FOR 501
#6 EPOXY FOR 601

PROJECT NAME: CALAIS	
PROJECT NUMBER: BHF 037-2(11)	
FILE NAME: s12b146Sub abut 2 reinf.dgn	PLOT DATE: 02-JUN-2020
PROJECT LEADER: G. LAROCHE	DRAWN BY: G. ROKES
DESIGNED BY: F. BARROWS	CHECKED BY: A. LEMIEUX
ABUTMENT 2 REINFORCING	SHEET 123 OF 134

STATE OF VERMONT
AGENCY OF TRANSPORTATION

REINFORCING STEEL SCHEDULE

ITEM	EACH	SIZE	LENGTH	MARK	TYPE	A	B	C	D	E	F	G	H	J	K	R	O
NEXT BEAM JOINTS																	
✳	25	4	30'- 4"	S401.2	STR	30'- 4"											
APPROACH SLAB 1																	
✳	43	5	16'- 9"	1EAS501	STR	16'- 9"											
✳	40	9	22'- 0"	1EAS901	1	1'- 3"	19'- 6"					1'- 3"		1'- 0"			
APPROACH SLAB 2																	
	42	5	16'- 9"	2EAS501	STR	16'- 9"											
	39	9	22'- 0"	2EAS901	1	1'- 3"	19'- 6"					1'- 3"		1'- 0"			
ABUTMENT 1																	
	16	5	24'- 6"	1EA501	STR	24'- 6"											
	6	5	29'- 3"	1EA502	STR	29'- 3"											
	10	5	2'- 0"	1EA503	STR	2'- 0"											
✳	11	7	29'- 3"	1EA701	STR	29'- 3"											
△	54	4	4'- 5"	1EA401	S10		8"	3'- 1"	8"								
	45	5	7'- 1"	1EA504	S10		2'- 0"	3'- 1"	2'- 0"								
▲	8	5	5'- 6"	1A501.2	STR	5'- 6"											
✳ ▲	9	5	11'- 3"	1A502.2	STR	11'- 3"											
	6	5	37'- 4"	1A503.2	STR	37'- 4"											
	6	5	0'- 8"	1A504.2	STR	8"											
	21	5	3'- 6"	1A505.2	STR	3'- 6"											
	4	5	1'- 5"	1A506.2	STR	1'- 5"											
△	25	8	1'- 4"	1A801.2	STR	1'- 4"											
▲	66	5	10'- 1"	1A507.2	17		7'- 0"	3'- 1"									
	19	5	7'- 1"	1A508.2	S10		2'- 0"	3'- 1"	2'- 0"								
▲	2	5	6'- 3"	1A509.2	22		3'- 9"	2'- 6"					2'- 3"		3'- 0"		
▲	2	5	11'- 6"	1A510.2	22		9'- 0"	2'- 6"					3'- 0"		8'- 9"		
▲	40	5	8'- 0"	1A511.2	S10		3'- 3"	1'- 7"	3'- 3"								
	32	5	7'- 5"	1A512.2	S10		3'- 3"	12"	3'- 3"								
	16	5	3'- 4"	1A513.2	S10		1'- 2"	12"	1'- 2"								
	4	5	4'- 11"	1A514.2	S10		2'- 1"	1'- 10"	12"								
	2	5	7'- 4"	1A515.2	S10		2'- 0"	3'- 4"	2'- 0"								
✳ ▲	67	6	10'- 1"	1A601.2	17		7'- 0"	3'- 1"									
	46	6	5'- 9"	1A602.2	1	8"	5'- 1"							6"			
ABUTMENT 2																	
▲	7	5	29'- 6"	2EA501	STR	29'- 6"											
▲	7	5	26'- 3"	2EA502	STR	26'- 3"											
▲	10	6	29'- 6"	2EA601	STR	29'- 6"											
✳ ▲	11	6	26'- 3"	2EA602	STR	26'- 3"											
	100	4	4'- 5"	2EA401	S10		8"	3'- 1"	8"								
	45	5	7'- 1"	2EA503	S10		2'- 0"	3'- 1"	2'- 0"								
	4	5	10'- 1"	2A501.2	STR	10'- 1"											
▲	4	5	8'- 10"	2A502.2	STR	8'- 10"											
	6	5	37'- 4"	2A503.2	STR	37'- 4"											
	6	5	0'- 8"	2A504.2	STR	8"											
	21	5	3'- 6"	2A505.2	STR	3'- 6"											
	4	5	1'- 5"	2A506.2	STR	1'- 5"											
	23	8	1'- 4"	2A801.2	STR	1'- 4"											
▲	68	5	10'- 3"	2A507.2	17		7'- 3"	3'- 1"									
▲	22	5	7'- 1"	2A508.2	S10		2'- 0"	3'- 1"	2'- 0"								
▲	2	5	10'- 11"	2A509.2	22		8'- 5"	2'- 6"					3'- 10"		7'- 6"		
▲	2	5	9'- 10"	2A510.2	22		7'- 4"	2'- 6"					3'- 10"		6'- 3"		
▲	40	5	8'- 0"	2A511.2	S10		3'- 3"	1'- 7"	3'- 3"								
	32	5	7'- 5"	2A512.2	S10		3'- 3"	12"	3'- 3"								
	16	5	3'- 4"	2A513.2	S10		1'- 2"	12"	1'- 2"								
	4	5	4'- 11"	2A514.2	S10		2'- 1"	1'- 10"	12"								
	2	5	7'- 4"	2A515.2	S10		2'- 0"	3'- 4"	2'- 0"								
▲	68	6	10'- 3"	2A601.2	17		7'- 3"	3'- 1"									
	46	6	5'- 9"	2A602.2	1	8"	5'- 1"							6"			

~ NOTES ~

1. UNLESS OTHERWISE DESIGNATED, ALL BAR REINFORCEMENT FOR CONCRETE IN SIZES UP TO AND INCLUDING NO. 18 SHALL CONFORM TO THE REQUIREMENTS OF THE "SPECIFICATIONS FOR DEFORMED BILLET-STEEL BARS FOR CONCRETE REINFORCEMENT", AASHTO M 31 (ASTM A 615-SI). ALL BARS SHALL BE GRADE 60, UNLESS OTHERWISE DESIGNATED.
2. FOR TYPICAL BENDING DETAILS, RECOMMENDED PIN DIAMETER "D" OF BENDS AND HOOKS, AND OTHER STANDARD PRACTICE, SEE CURRENT CONCRETE REINFORCING STEEL INSTITUTE "MANUAL OF STANDARD PRACTICE".
3. BARS WHICH REQUIRE MORE ACCURATE BENDING THAN STANDARD PRACTICES SHOULD HAVE LIMITS INDICATED.
4. ALL DIMENSIONS ARE OUT TO OUT OF BAR EXCEPT "A" AND "G" ON STANDARD 180 DEGREE AND 135 DEGREE HOOKS.
5. "J" DIMENSION ON 180 DEGREE HOOKS TO BE SHOWN ONLY WHERE NECESSARY TO RESTRICT HOOK SIZE. OTHERWISE, STANDARD HOOKS ARE TO BE USED.
6. "H" DIMENSION ON STIRRUPS TO BE SHOWN ONLY WHEN NECESSARY TO MAINTAIN CLEARANCES.
7. WHERE SLOPE DIFFERS FROM 45 DEGREES, DIMENSIONS "H" AND "K" MUST BE SHOWN.
8. ▲ DENOTES BARS TO BE CUT IN FIELD.
9. ✳ DENOTES ONE EXTRA BAR ADDED FOR TESTING PURPOSES.
10. △ DENOTES TWO EXTRA BARS ADDED FOR TESTING PURPOSES.

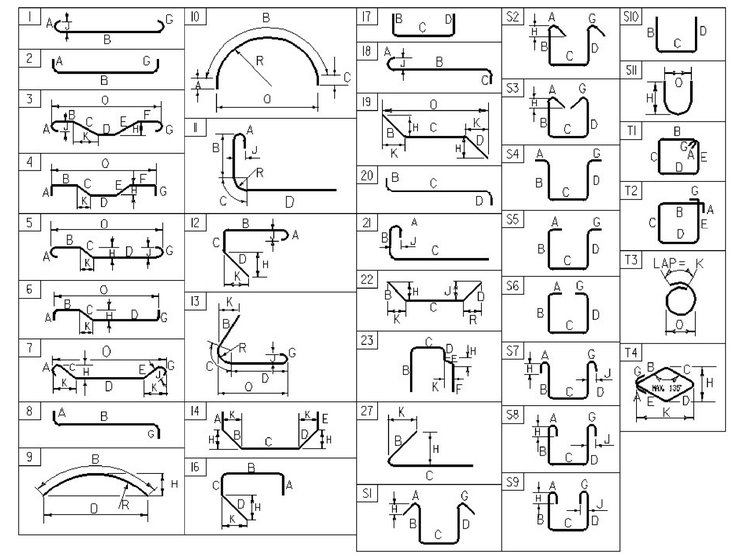

ASTM STANDARD REINFORCING BARS

BAR SIZE DESIGNATION	WEIGHT POUNDS PER FOOT	NOMINAL DIMENSIONS ROUND SECTION		
		DIAMETER INCHES	AREA INCHES²	PERIMETER INCHES
#3	0.376	0.375	0.11	1.178
#4	0.668	0.500	0.20	1.571
#5	1.043	0.625	0.31	1.963
#6	1.502	0.750	0.44	2.356
#7	2.044	0.875	0.60	2.749
#8	2.670	1.000	0.79	3.142
#9	3.400	1.128	1.00	3.544
#10	4.303	1.270	1.27	3.990
#11	5.313	1.410	1.56	4.430
#14	7.65	1.693	2.25	5.32
#18	13.60	2.257	4.00	7.09

~ REINFORCING STEEL CORROSION RESISTANCE LEVEL ~

THE REINFORCING STEEL MARKS IN THIS SCHEDULE INDICATE THE REQUIRED BAR CORROSION RESISTANCE LEVEL. CORROSION RESISTANCE LEVEL IS DENOTED WITH A .2 FOR LEVEL TWO SUFFIX OR .3 FOR LEVEL THREE SUFFIX. .1 FOR LEVEL ONE IS TO BE OMITTED. THE BAR MATERIAL TYPE AND BAR STEEL GRADE PROVIDED FOR EACH CORROSION LEVEL WILL BE RECORDED ON THE PLAN SET PI SHEET FOR AS-BUILT RECORD PLAN ARCHIVES.

PROJECT NAME: CALAIS
PROJECT NUMBER: BHF 037-2(11)

FILE NAME: s12b146rebar.dgn
PROJECT LEADER: G. LAROCHE
DESIGNED BY: F. BARRWS
REINFORCING STEEL SCHEDULE

PLOT DATE: 02-JUN-2020
DRAWN BY: S. COLEY
CHECKED BY: G. LAROCHE
SHEET 124 OF 134

REMOVAL AND DISPOSAL OF GUARDRAIL

STA. 336+75 - 337+15 RT
STA. 336+96 - 337+28 LT
STA. 337+49 - 337+94 RT
STA. 337+62 - 338+12 LT

MANUFACTURED TERMINAL SECTION, TANGENT

STA. 335+72.5 - 336+22.9 RT
STA. 335+97.4 - 336+47.7 LT
STA. 339+54.5 - 340+04.8 LT

SPECIAL PROVISION (BOX BEAM GUAARDRAIL, TERMINAL SECTION, TYPE IIA)

STA. 338+13.2 - 338+39.7 RT

BOX BEAM GUARDRAIL

STA. 336+22.9 - 336+68.0 RT
STA. 336+47.7 - 336+80.6 LT
STA. 337+95.2 - 338+13.2 RT
STA. 338+07.4 - 339+54.5 LT

GUARDRAIL APPROACH SECTION, GALVANIZED 3 RAIL BOX BEAM

STA. 336+68.0 - 337+00.1 RT
STA. 337+75.0 - 338+07.0 LT
STA. 337+63.2 - 337+95.2 RT
STA. 338+75.4 - 338+07.4 LT

BRIDGE RAILING, GALVANIZED 3 RAIL BOX BEAM

STA. 337+00.1 - 337+63.2 RT
STA. 337+12.5 - 337+75.4 LT

DELINEATOR WITH STEEL POST

STA. 335+70.5 RT (BLUE)
STA. 338+17.6 RT (GREEN)
STA. 335+95.8 LT (GREEN)
STA. 340+06.3 LT (BLUE)

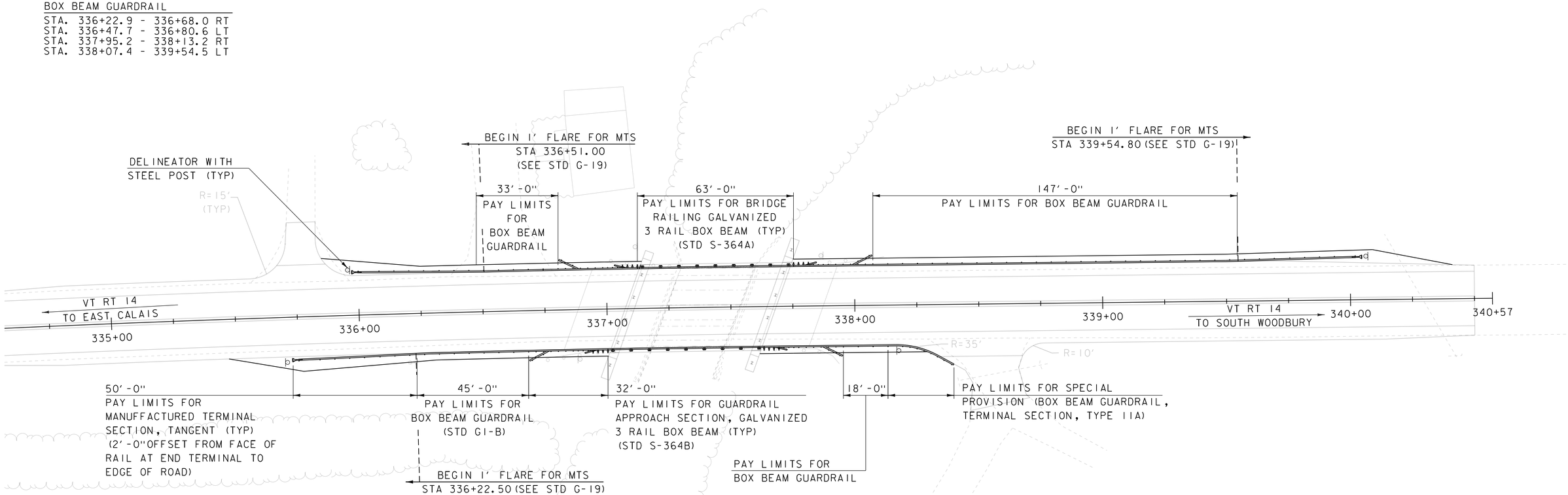

SCALE 1" = 20'-0"
20 0 20

PROJECT NAME: CALAIS	
PROJECT NUMBER: BHF 037-2(11)	
FILE NAME: s12b146rail.dgn	PLOT DATE: 02-JUN-2020
PROJECT LEADER: G. LAROCHE	DRAWN BY: S. COLEY
DESIGNED BY: S. COLEY	CHECKED BY: G. LAROCHE
RAIL LAYOUT	SHEET 125 OF 134

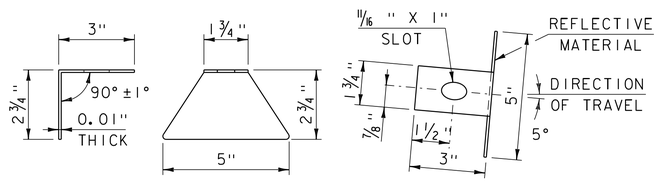

DELINEATION DEVICE DETAILS

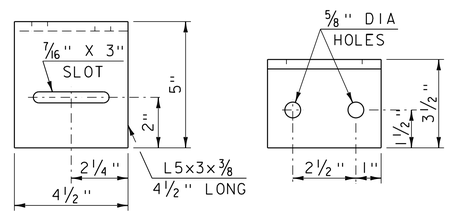

RAIL SUPPORT ANGLE

(STD HM-TF-13 P-5-76)

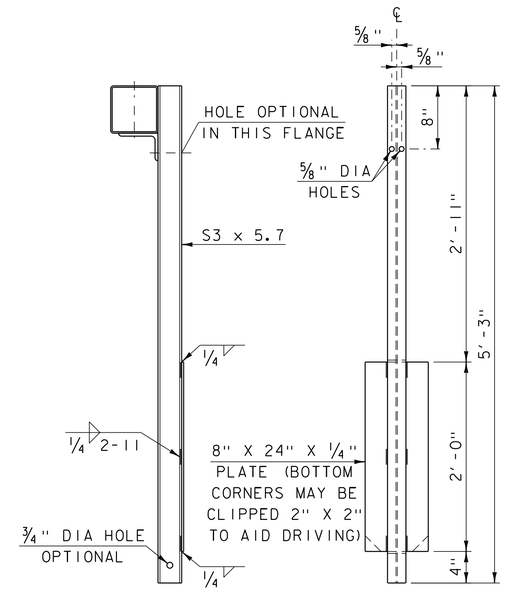

S3 X 5.7 POST

(STD HM-TF-13 P-4-76)

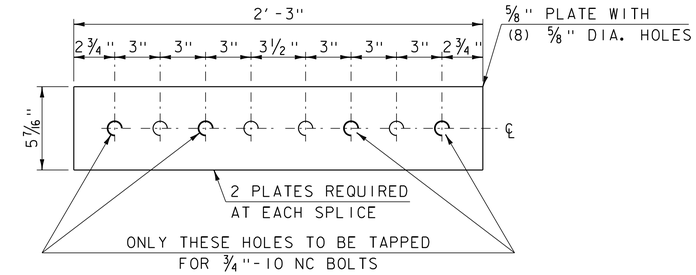

SPLICE PLATE SHOWING TAPPED BOLT HOLES

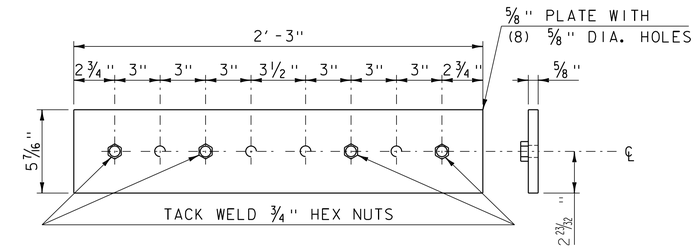

SPLICE PLATE SHOWING 3/4" HEX NUTS WELDED TO PLATE

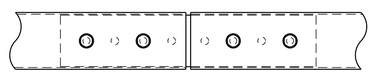

TOP VIEW OF SPLICE

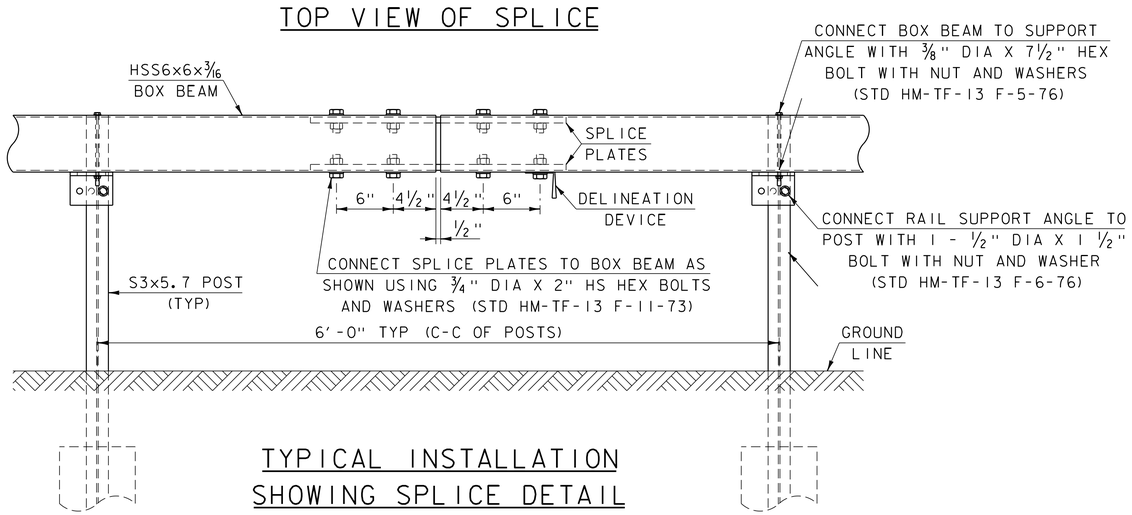

TYPICAL INSTALLATION SHOWING SPLICE DETAIL

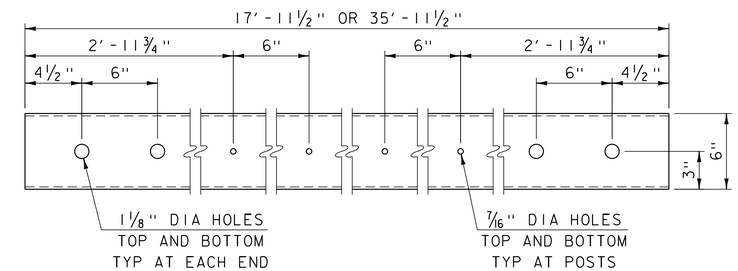

HSS6x6x3/16 BOX BEAM RAIL ELEMENT

(STD HM-TF-13 RE-10-76)

NOTES:

1. RAIL SECTIONS FOR TANGENT RUNS WILL EITHER BE 17'-11 1/2" OR 35'-11 1/2" IN LENGTH.
2. ON CURVES, CHORD LENGTHS WILL BE NO LESS THAN 12'-0".
3. FOR CURVES GREATER THAN 8°, RAIL SECTIONS WILL BE SHOP FORMED TO THE REQUIRED CURVATURE. PAYMENT OF SUCH SHOP WORK WILL BE CONSIDERED TO BE SUBSIDIARY TO BOX BEAM GUARDRAIL.
4. WELD OR GALVANIZING PROTRUSIONS WILL NOT BE PERMITTED ON TOP OR BOTTOM INSIDE WALLS IN SPLICE AREA.
5. THE REFLECTORIZED ALUMINUM DELINEATION DEVICE IS TO BE ERECTED AT EVERY OTHER BOX BEAM SPLICE (36'-0"). DELINEATOR SHALL MEET THE SPECIFICATION REQUIREMENTS FOR ASTM B 209M, ALLOY 5052-H32.
6. REFLECTIVE MATERIAL SHALL MEET THE REQUIREMENTS OF SUBSECTION 750.08 AND SHALL BE RETROREFLECTIVE SHEETING WHITE OR YELLOW. YELLOW IS TO BE INSTALLED ON THE LEFT OR MEDIAN SIDE OF INTERSTATE ROADWAYS AND RAMPS.

NOTE:
WELD OR GALVANIZING PROTRUSIONS NOT PERMITTED ON TOP OR BOTTOM INSIDE WALLS IN SPLICE AREA

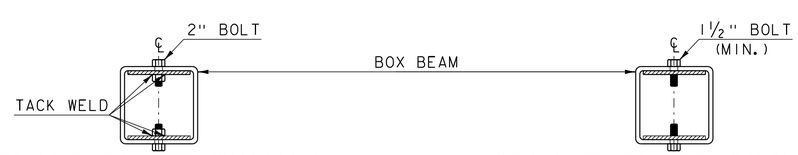

SPLICE PLATE SHOWING 3/4" HEX NUTS WELDED TO PLATE

SPLICE PLATE SHOWING TAPPED BOLT HOLES

PROJECT NAME: CALAIS	
PROJECT NUMBER: BHF 037-2(11)	
FILE NAME: s12b146rail.dgn	PLOT DATE: 02-JUN-2020
PROJECT LEADER: G. LAROCHE	DRAWN BY: S. COLEY
DESIGNED BY: C. MOONEY	CHECKED BY: G. LAROCHE
BOX BEAM GUARD RAIL DETAILS	SHEET 126 OF 134

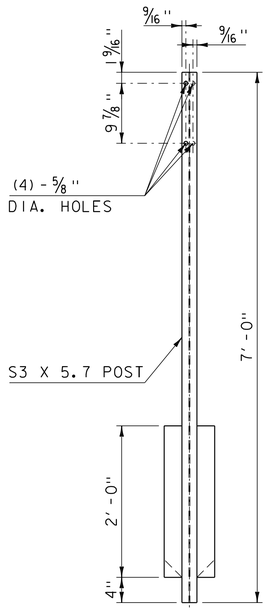

FRONT ELEVATION
POSTS 2 AND 4
NOT TO SCALE

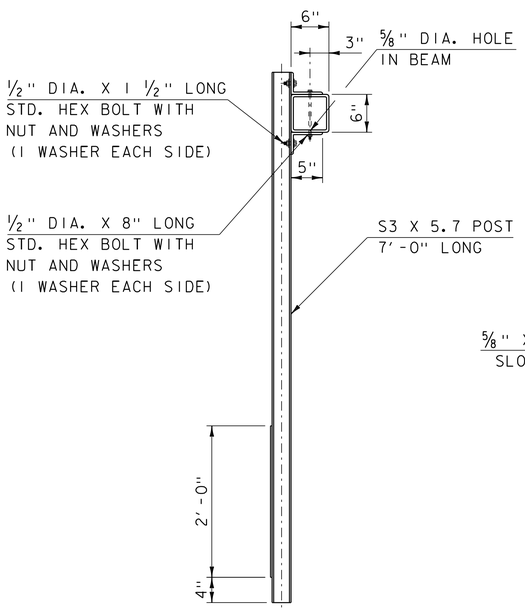

SIDE ELEVATION
POSTS 2 AND 4
NOT TO SCALE

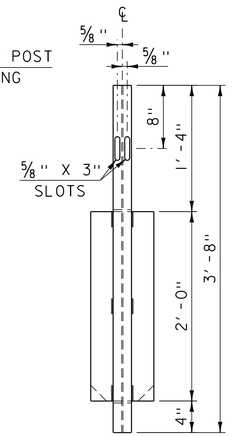

END POST
DETAIL

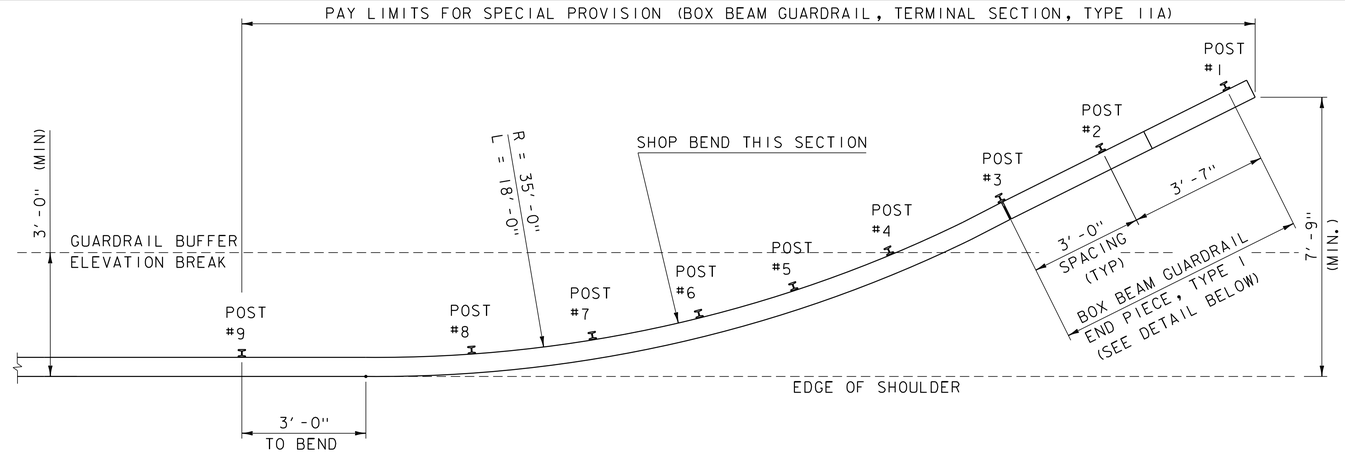

BOX BEAM GUARDRAIL, TERMINAL SECTION, TYPE IIA - PLAN VIEW
NOT TO SCALE

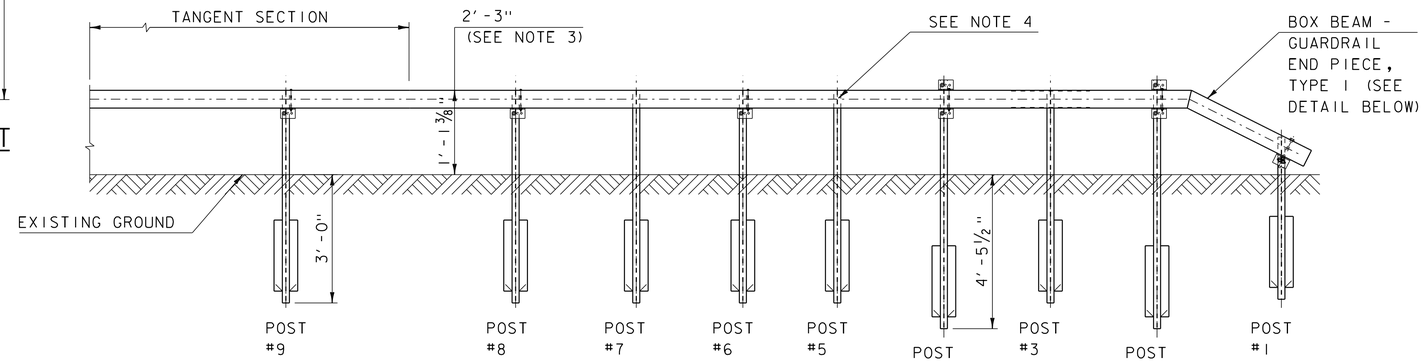

BOX BEAM GUARDRAIL, TERMINAL SECTION, TYPE IIA - ELEVATION VIEW
NOT TO SCALE

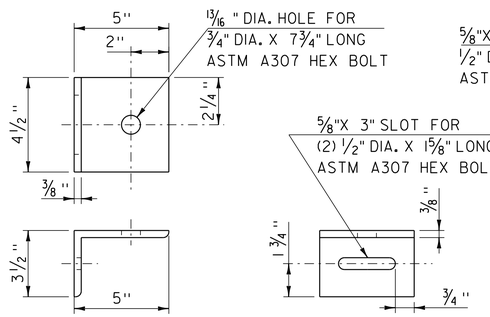

BRACKET DETAILS POST 1
NOT TO SCALE

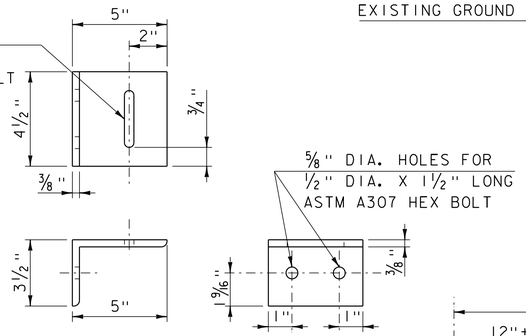

BRACKET DETAILS POSTS 2 AND 4
NOT TO SCALE

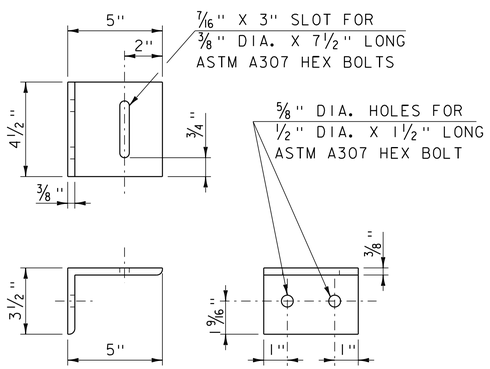

BRACKET DETAILS POSTS
3, 5, 6, 7, 8 AND 9
NOT TO SCALE

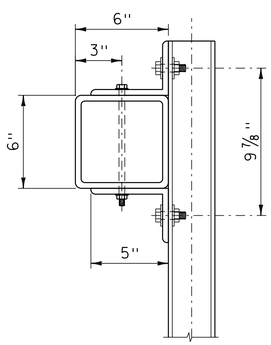

POSTS 2 AND 4 CONNECTION
DETAIL "DETAIL A"
NOT TO SCALE

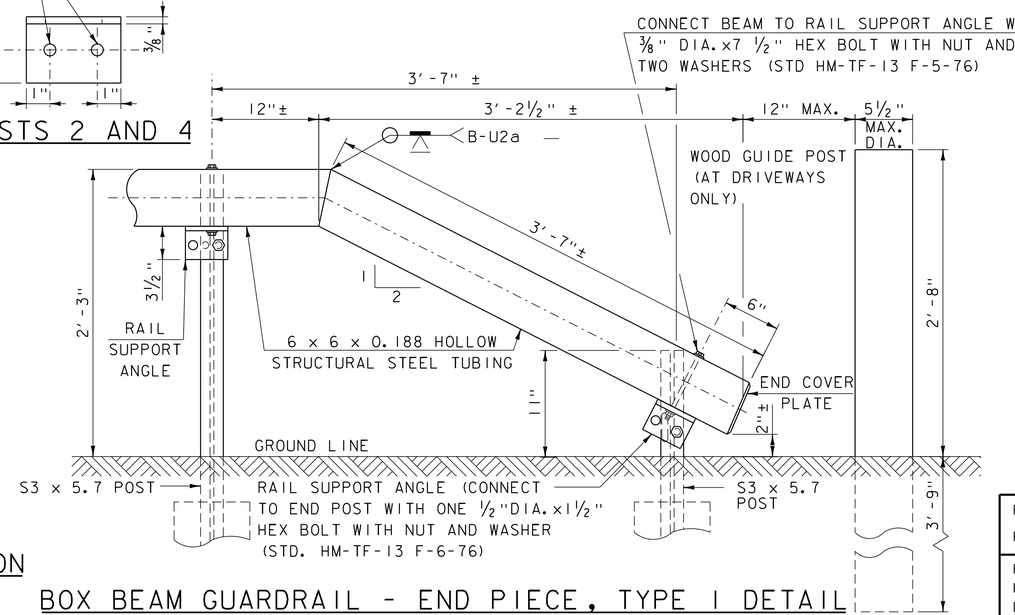

BOX BEAM GUARDRAIL - END PIECE, TYPE I DETAIL

NOTES:

1. POSTS 2 AND 4 SHALL BE EXTRA LONG POSTS. POSTS 1, 3, 5, 6, 7, 8 AND 9 SHALL BE STANDARD LENGTH.
2. POSTS 2 AND 4 SHALL BE FASTENED TO THE RAIL USING DETAIL "A".
3. THE DRAWING INDICATES THE TERMINAL INSTALLED ON LEVEL GROUND. WHEN INSTALLED OVER A SLOPE OR DITCH, THE TERMINAL END SHOULD BE PUSHED DOWN WITH THE EQUIVALENT OF APPROXIMATELY 100 LBS EFFORT TO DEPRESS THE TERMINAL DOWN.
4. POSTS 3, 5 AND 7 SHALL NOT BE CONNECTED TO BOX BEAM GUARDRAIL.
5. SEE BOX BEAM DETAIL SHEET FOR SPLICE AND TYPICAL END ASSEMBLY DETAILS.

PROJECT NAME: CALAIS	
PROJECT NUMBER: BHF 037-2(11)	
FILE NAME: s12b146rail.dgn	PLOT DATE: 02-JUN-2020
PROJECT LEADER: G. LAROCHE	DRAWN BY: S. COLEY
DESIGNED BY: C. MOONEY	CHECKED BY: G LAROCHE
BOX BEAM END TERMINAL, TYPE IIA	SHEET 127 OF 134

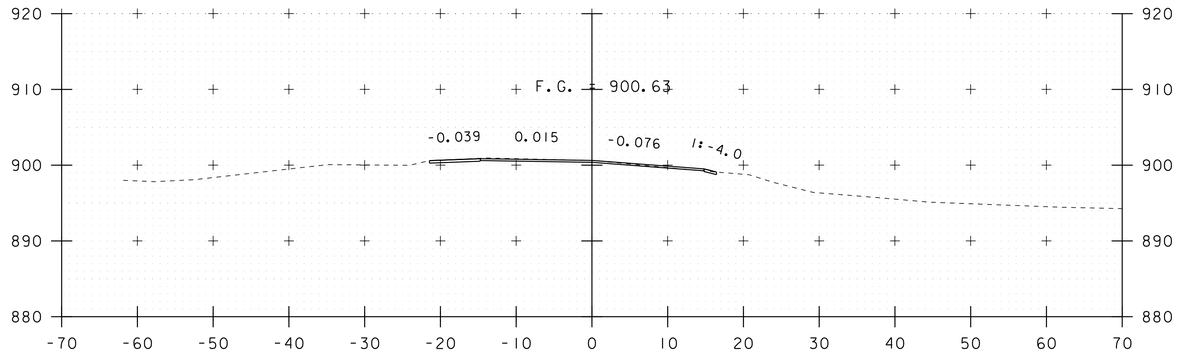

334+50

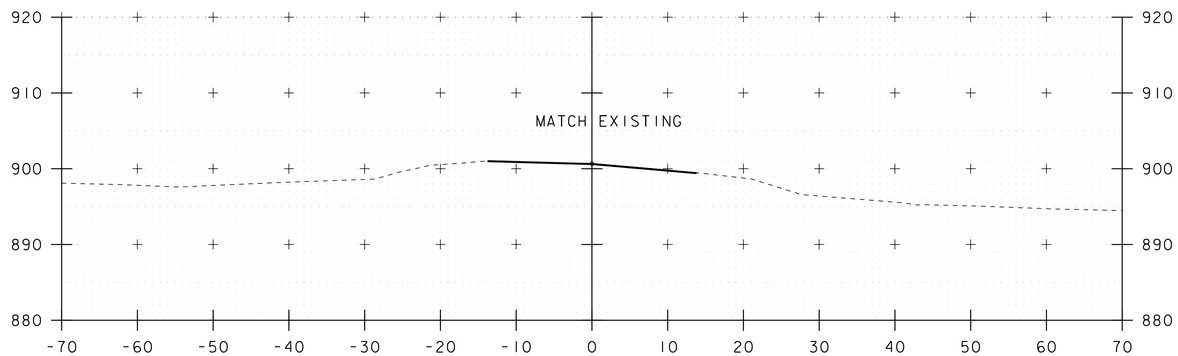

334+25
BEGIN APPROACH

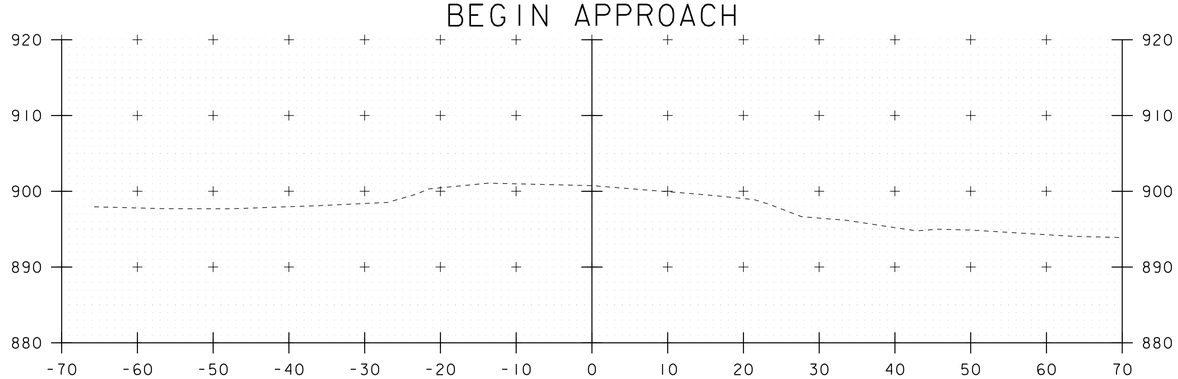

334+00

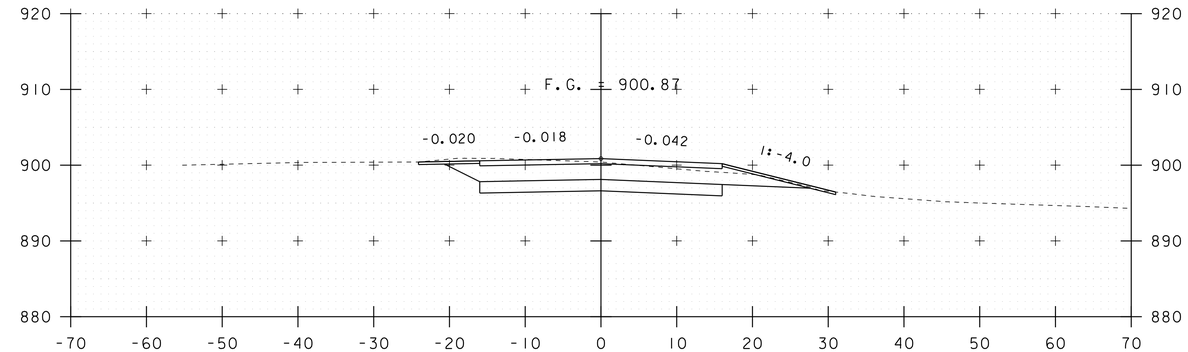

335+25

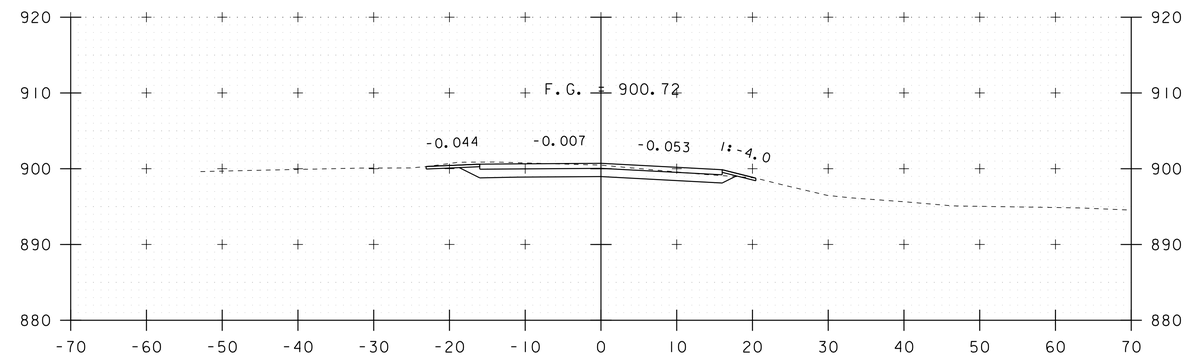

335+00

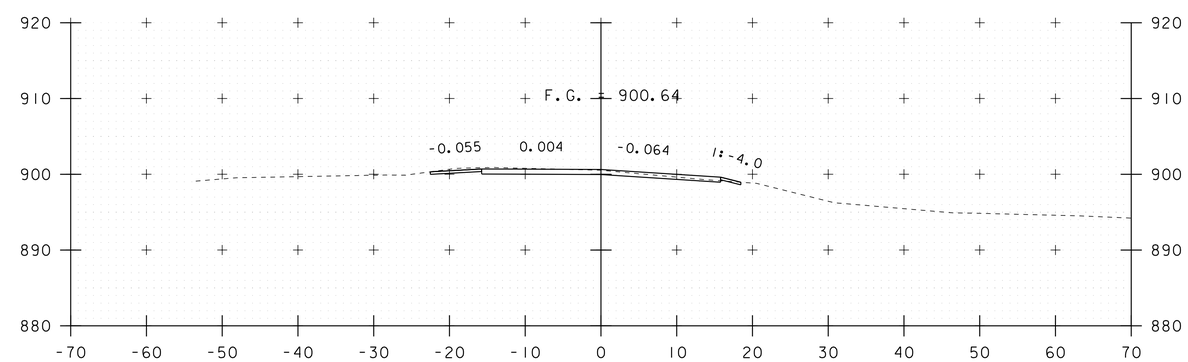

334+75
BEGIN PROJECT

STA. 334+00 TO STA. 335+25

PROJECT NAME: CALAIS	
PROJECT NUMBER: BHF 037-2(11)	
FILE NAME: s12b146xs.dgn	PLOT DATE: 02-JUN-2020
PROJECT LEADER: G. LAROCHE	DRAWN BY: G. ROKES
DESIGNED BY: G. ROKES	CHECKED BY: G. LAROCHE
MAINLINE CROSS SECTIONS 1	SHEET 128 OF 134

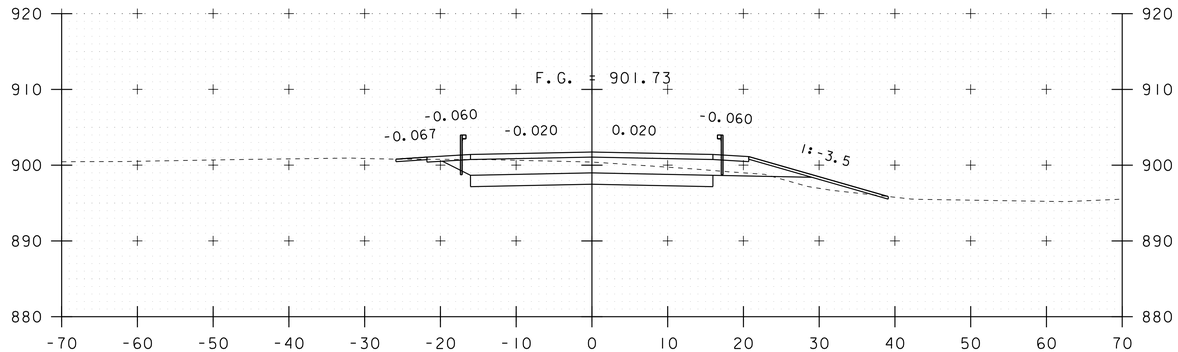

336+00

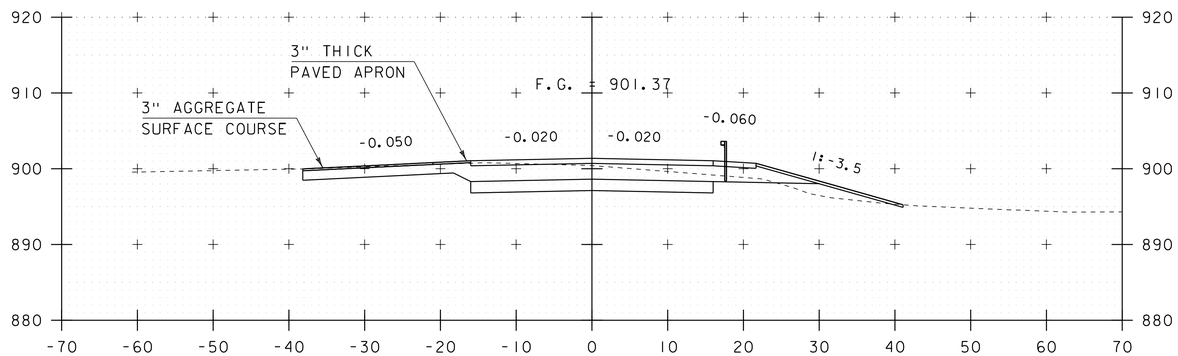

335+75

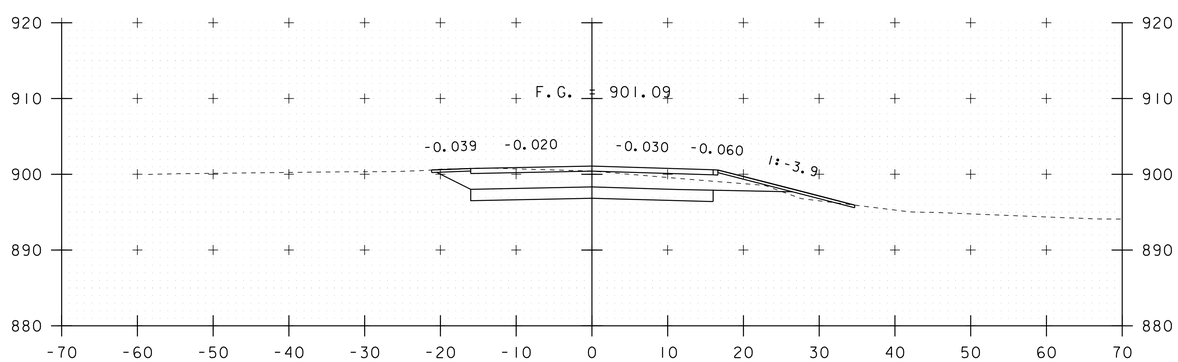

335+50

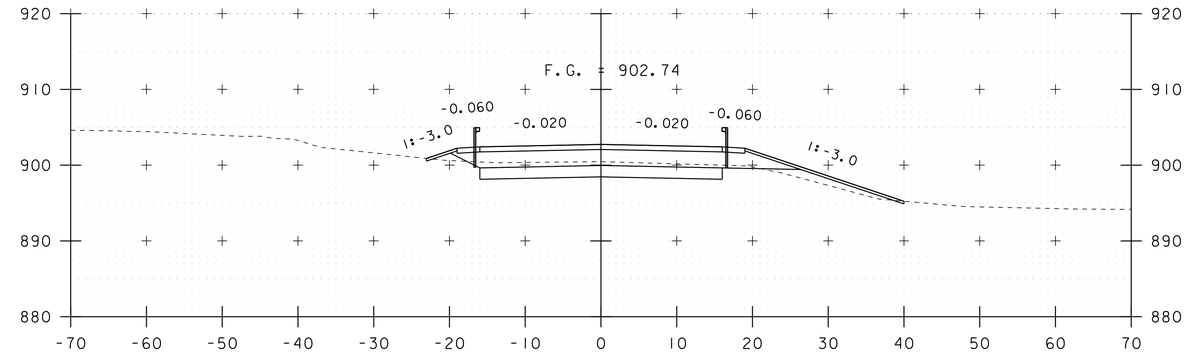

336+75

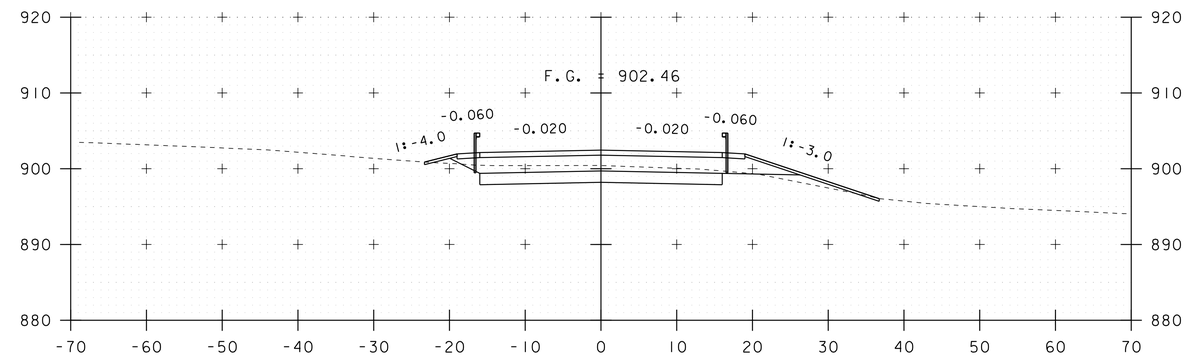

336+50

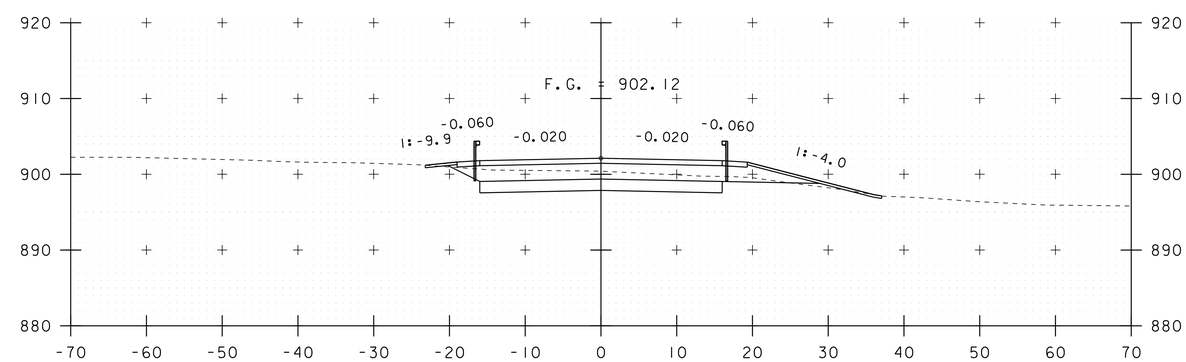

336+25

STA. 335+50 TO STA. 336+75

PROJECT NAME: CALAIS	
PROJECT NUMBER: BHF 037-2(11)	
FILE NAME: s12b146xs.dgn	PLOT DATE: 02-JUN-2020
PROJECT LEADER: G. LAROCHE	DRAWN BY: G. ROKES
DESIGNED BY: G. ROKES	CHECKED BY: G. LAROCHE
MAINLINE CROSS SECTIONS 2	SHEET 129 OF 134

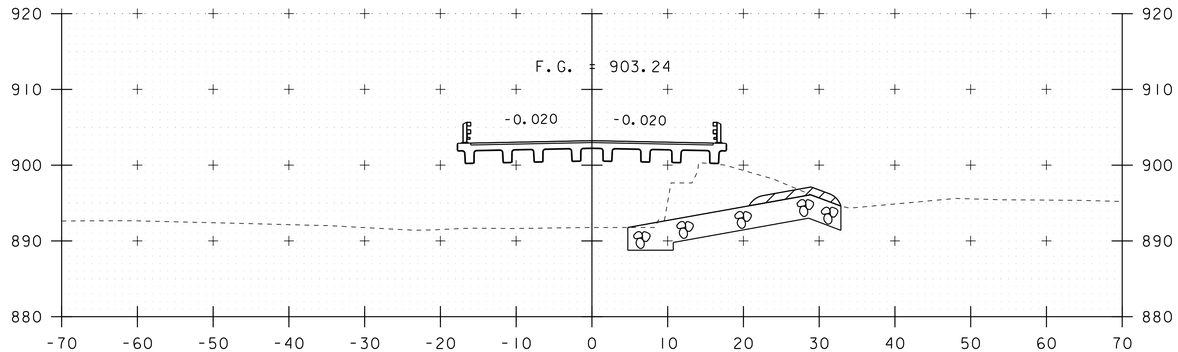

337+50

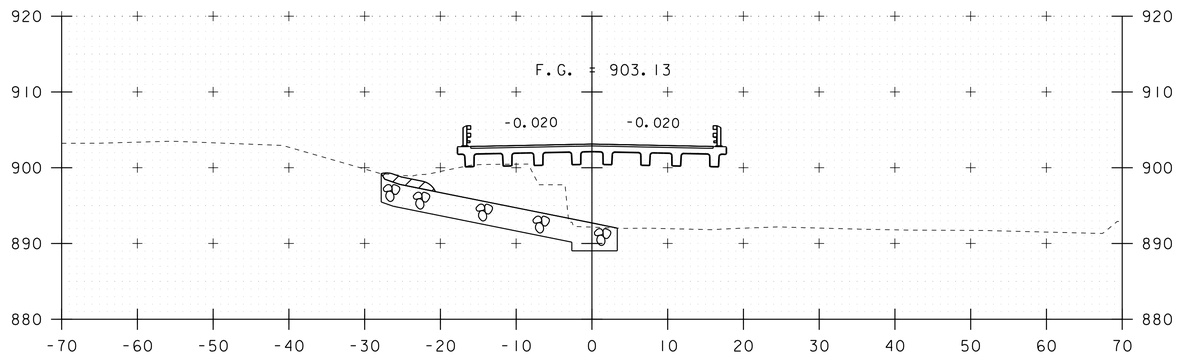

337+25
BEGIN BRIDGE 337+08.40

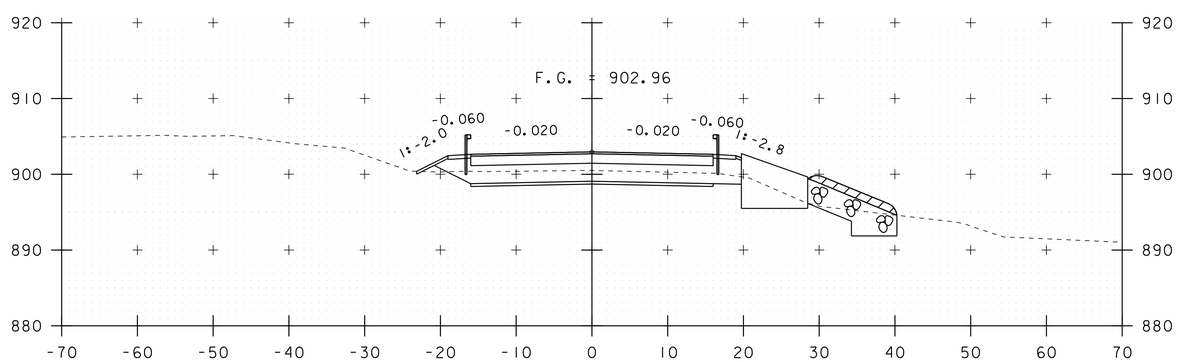

337+00

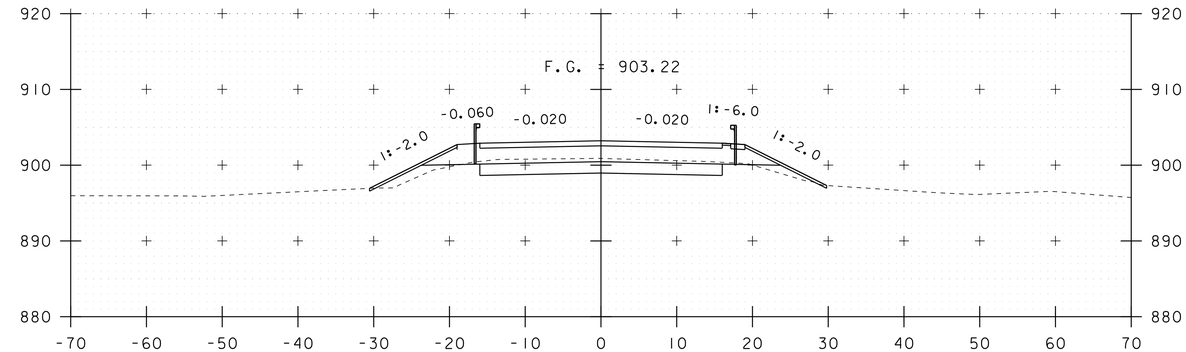

338+25

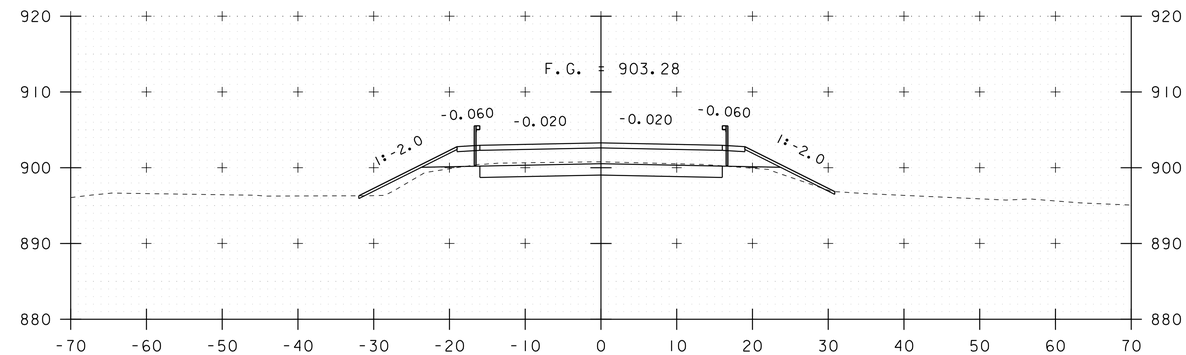

338+00

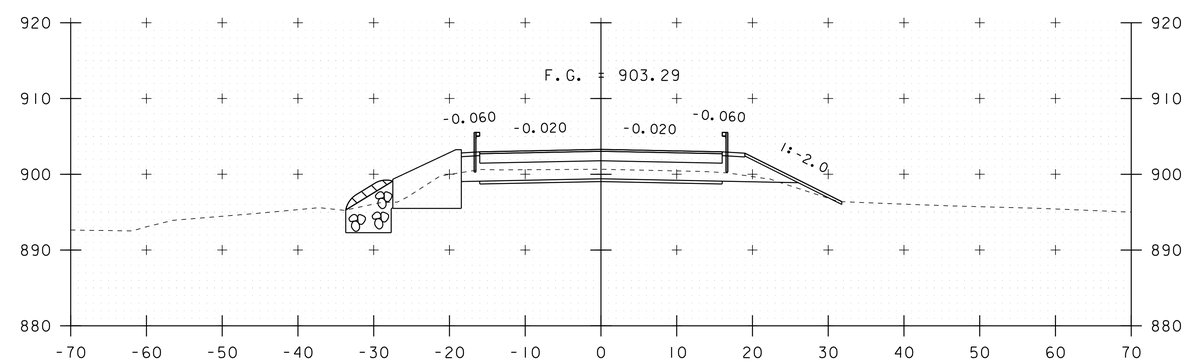

337+75
END BRIDGE 337+67.25

STA. 337+00 TO STA. 338+25

PROJECT NAME: CALAIS	
PROJECT NUMBER: BHF 037-2(II)	
FILE NAME: s12bl46xs.dgn	PLOT DATE: 02-JUN-2020
PROJECT LEADER: G. LAROCHE	DRAWN BY: G. ROKES
DESIGNED BY: G. ROKES	CHECKED BY: G. LAROCHE
MAINLINE CROSS SECTIONS 3	SHEET 130 OF 134

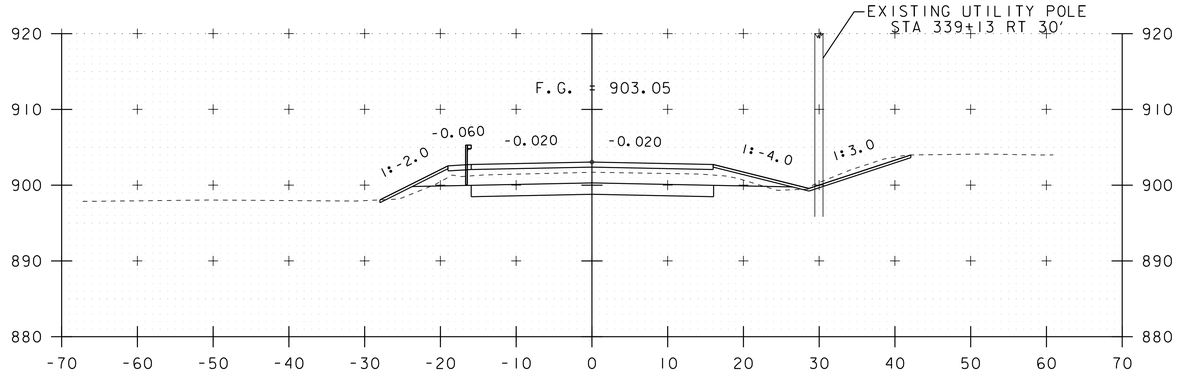

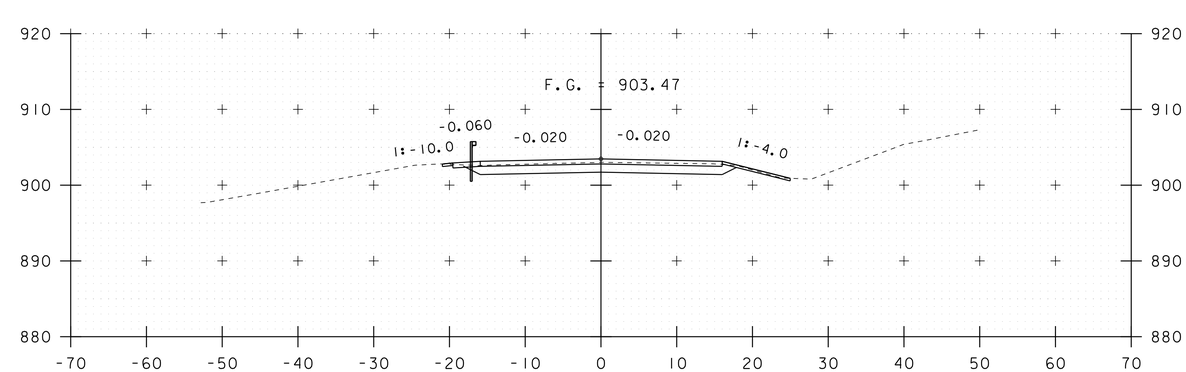

339+00

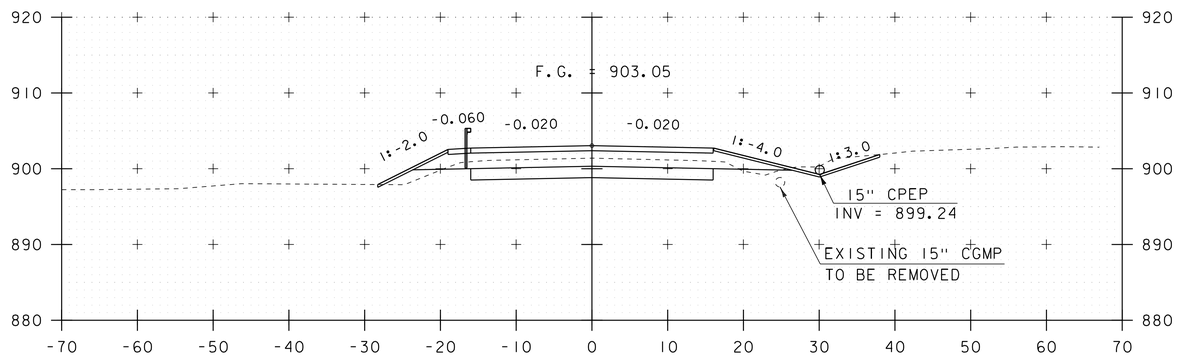

339+75

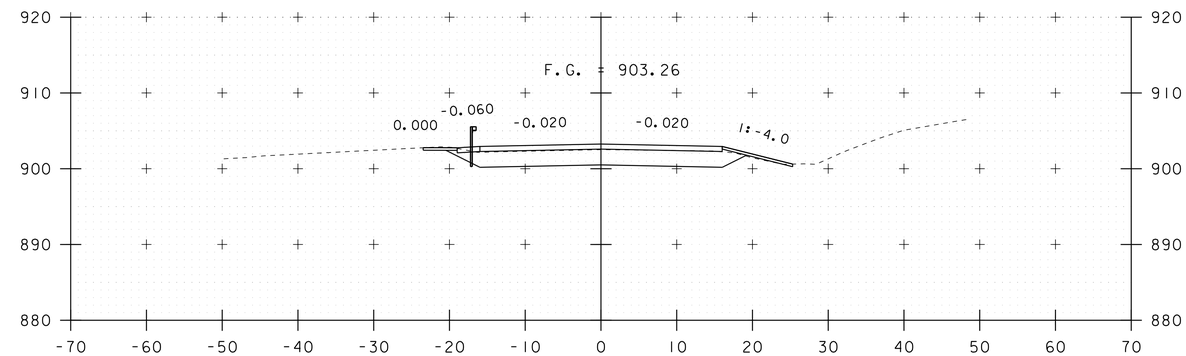

338+75

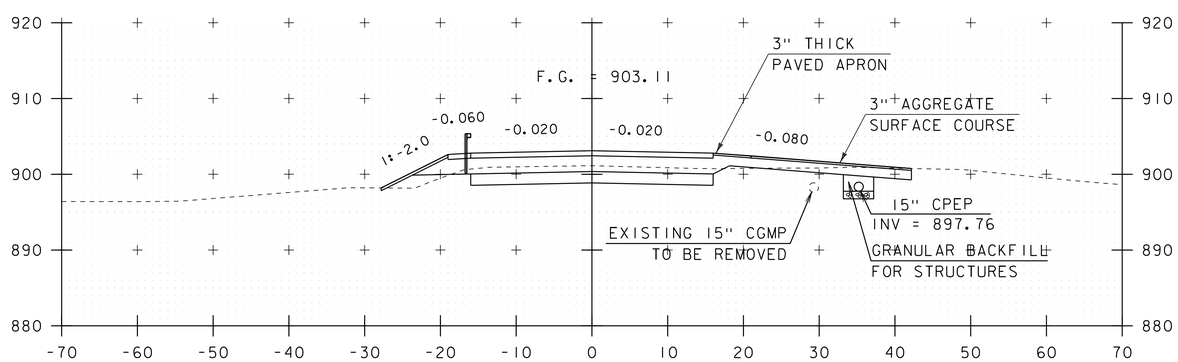

339+50

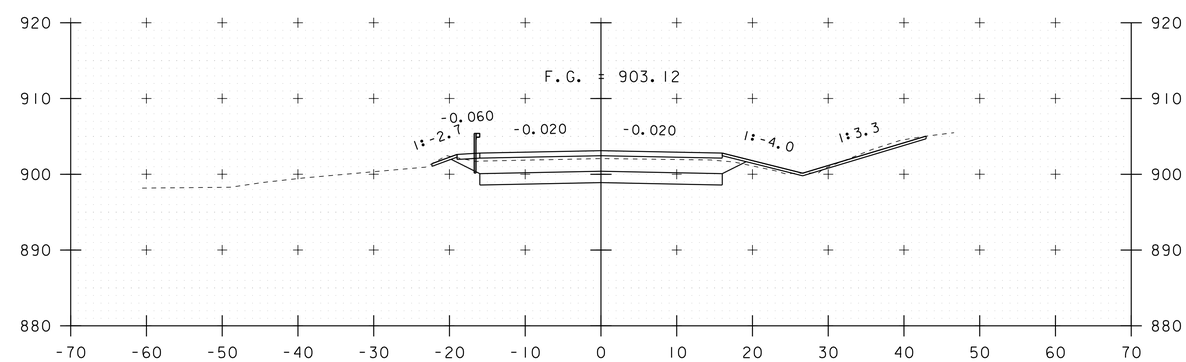

338+50

339+25

STA. 338+50 TO STA. 339+75

PROJECT NAME: CALAIS	
PROJECT NUMBER: BHF 037-2(11)	
FILE NAME: s12b146xs.dgn	PLOT DATE: 02-JUN-2020
PROJECT LEADER: G. LAROCHE	DRAWN BY: G. ROKES
DESIGNED BY: G. ROKES	CHECKED BY: G. LAROCHE
MAINLINE CROSS SECTIONS 4	SHEET 131 OF 134

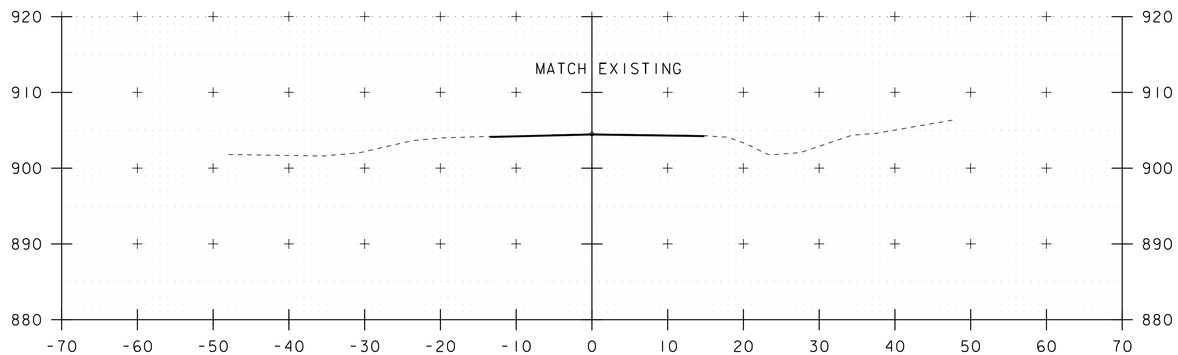

340+50
END APPROACH

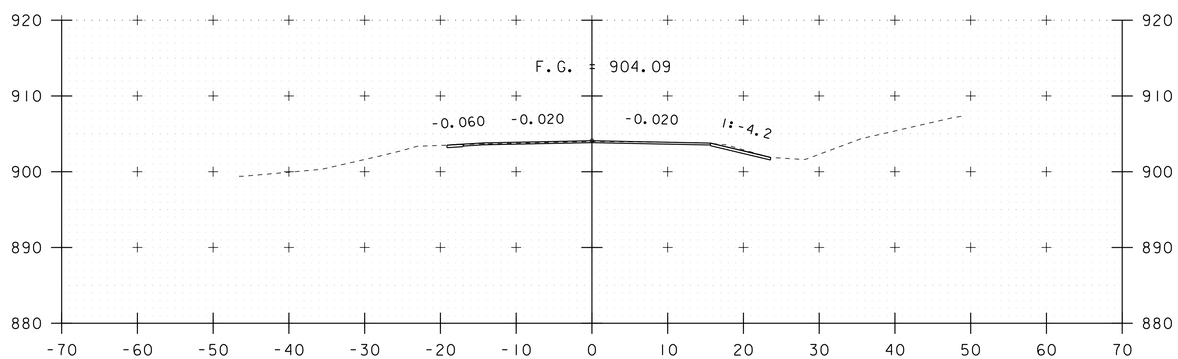

340+25

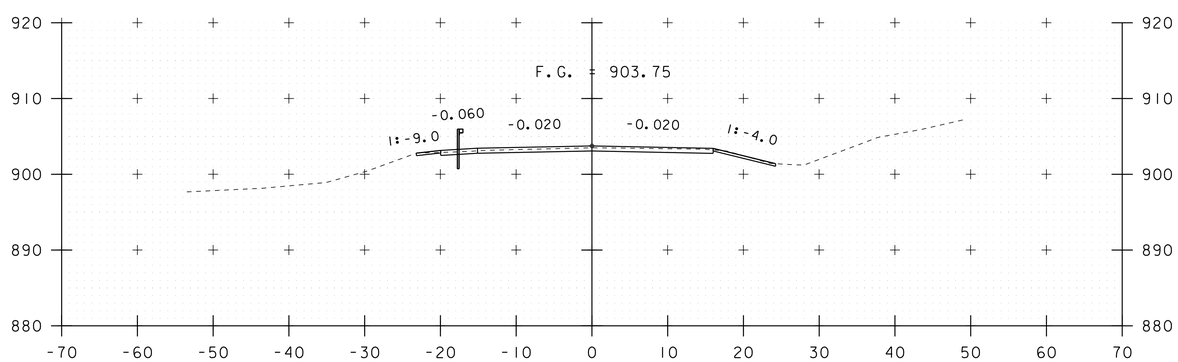

340+00
END PROJECT

STA. 340+00 TO STA. 340+50

PROJECT NAME: CALAIS	
PROJECT NUMBER: BHF 037-2(11)	
FILE NAME: s12b146xs.dgn	PLOT DATE: 02-JUN-2020
PROJECT LEADER: G. LAROCHE	DRAWN BY: G. ROKES
DESIGNED BY: G. ROKES	CHECKED BY: G. LAROCHE
MAINLINE CROSS SECTIONS 5	SHEET 132 OF 134

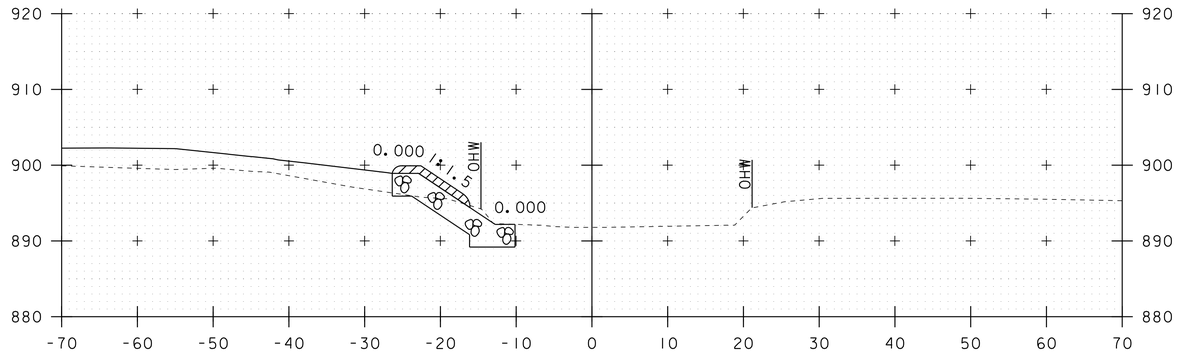

50+60

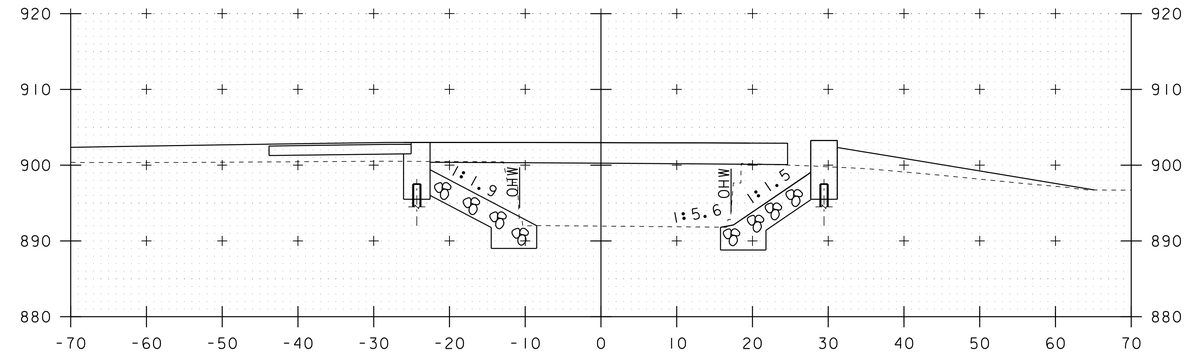

50+90

STA. 50+86 RT
END GRUBBING MATERIAL

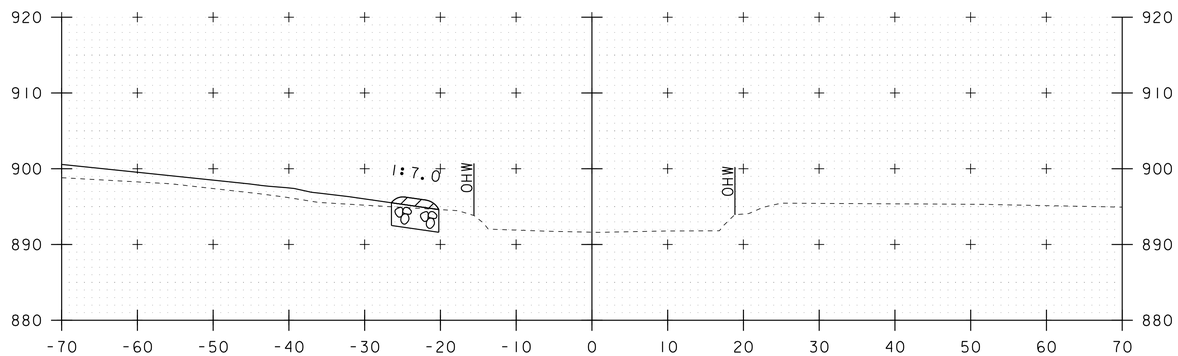

STA. 50+47.8 LT
BEGIN UNCLASSIFIED CHANNEL EXCAVATION
GEOTEXTILE UNDER STONE FILL
STONE FILL TYPE III
GRUBBING MATERIAL

50+50

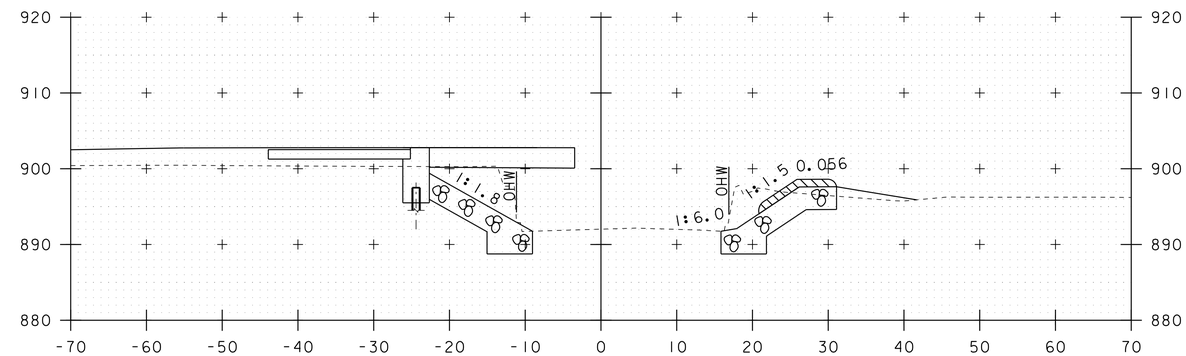

50+80

STA. 50+74.0 RT
BEGIN UNCLASSIFIED CHANNEL EXCAVATION
GEOTEXTILE UNDER STONE FILL
STONE FILL TYPE III
GRUBBING MATERIAL

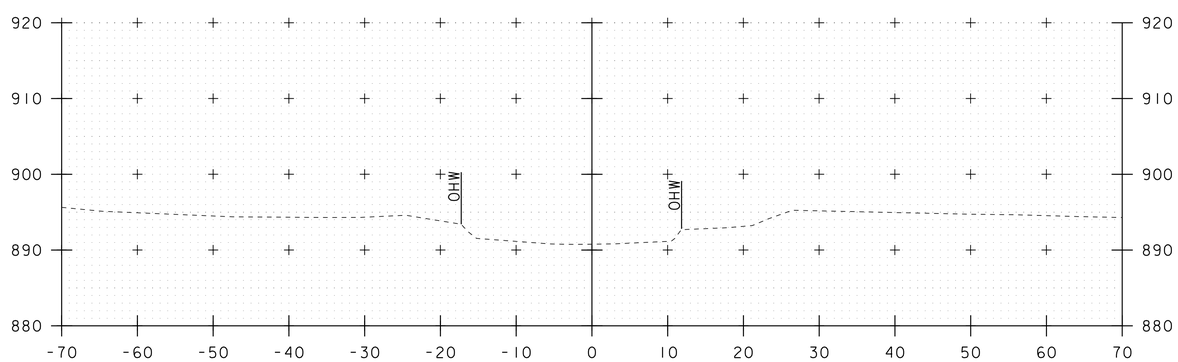

50+25

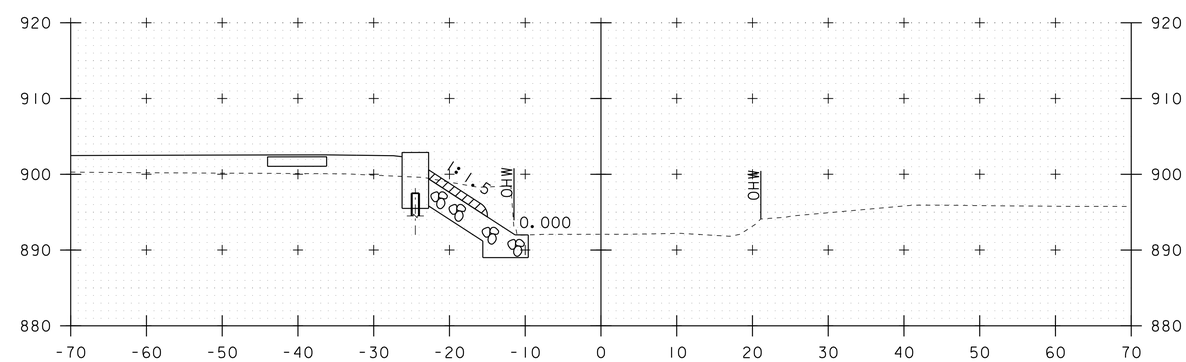

STA. 50+76 LT
END GRUBBING MATERIAL

50+70

STA. 50+25 TO STA. 50+90

PROJECT NAME: CALAS	
PROJECT NUMBER: BHF 037-2(11)	
FILE NAME: s12b146xs.dgn	PLOT DATE: 02-JUN-2020
PROJECT LEADER: G. LAROCHE	DRAWN BY: G. ROKES
DESIGNED BY: G. ROKES	CHECKED BY: G. LAROCHE
CHANNEL CROSS SECTIONS 1	SHEET 133 OF 134

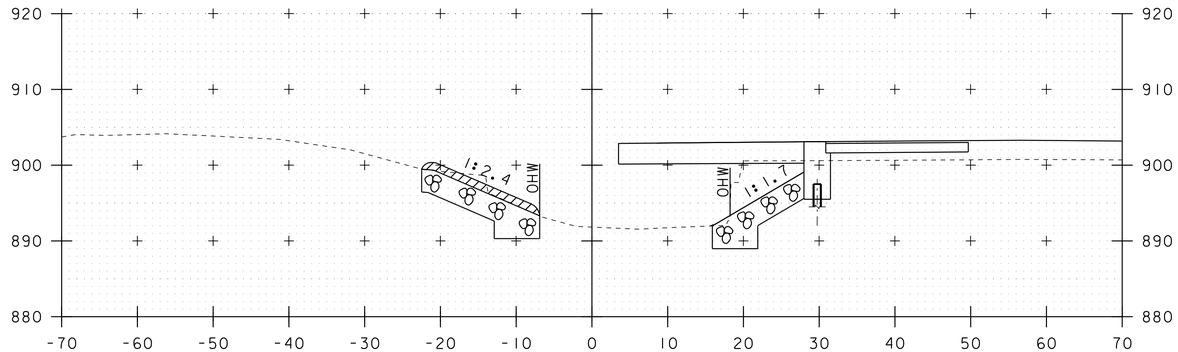

STA. 51+23.4 LT
END UNCLASSIFIED CHANNEL EXCAVATION
GEOTEXTILE UNDER STONE FILL
STONE FILL TYPE III
GRUBBING MATERIAL

STA. 51+24 RT
START GRUBBING MATERIAL

51+20

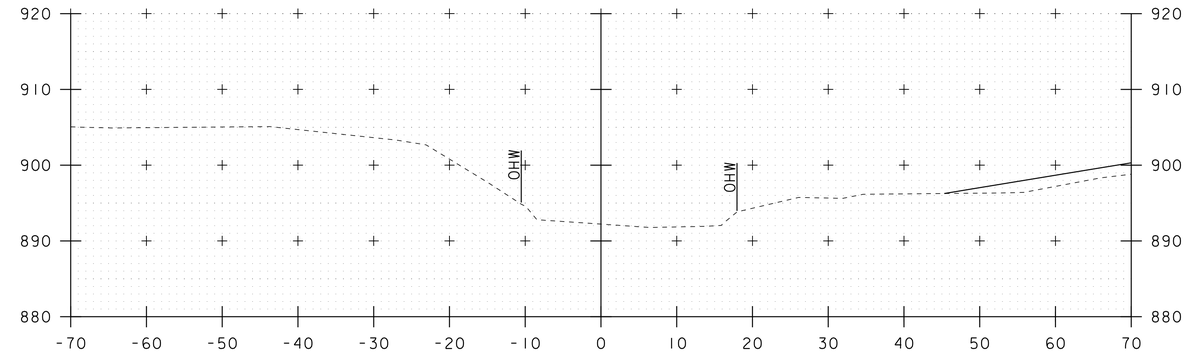

51+50

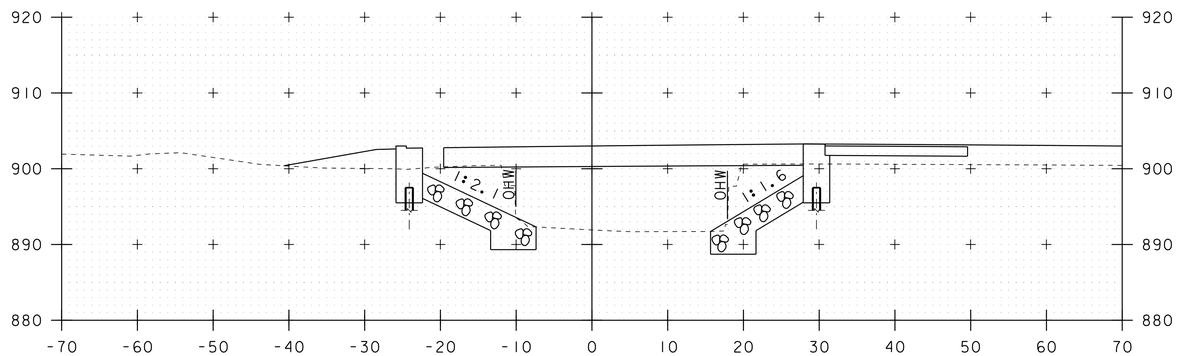

STA. 51+06 LT
START GRUBBING MATERIAL

51+10

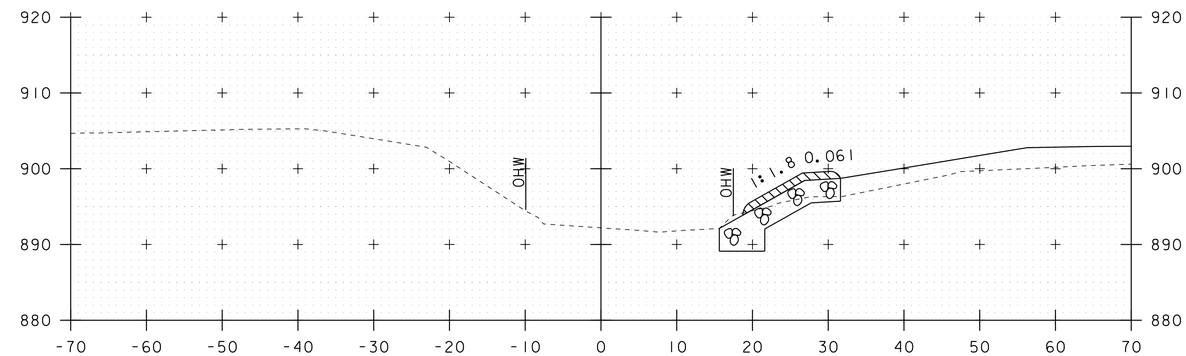

STA. 51+45.1 RT
END UNCLASSIFIED CHANNEL EXCAVATION
GEOTEXTILE UNDER STONE FILL
STONE FILL TYPE III
GRUBBING MATERIAL

51+40

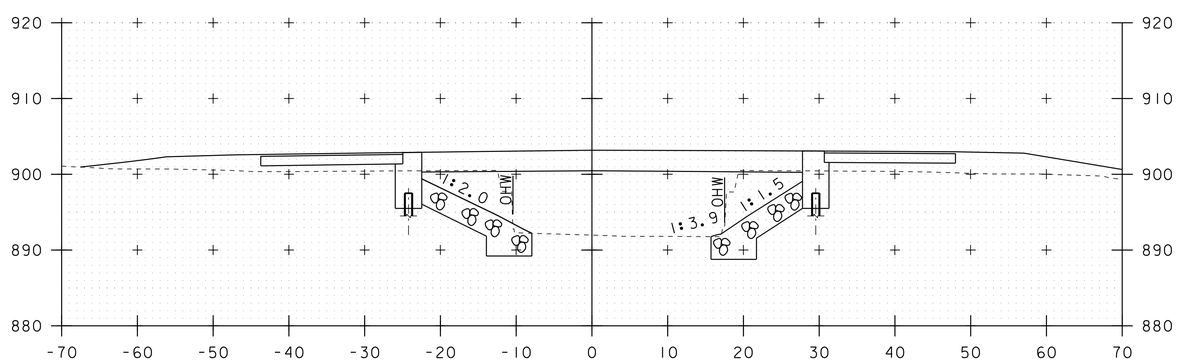

51+00

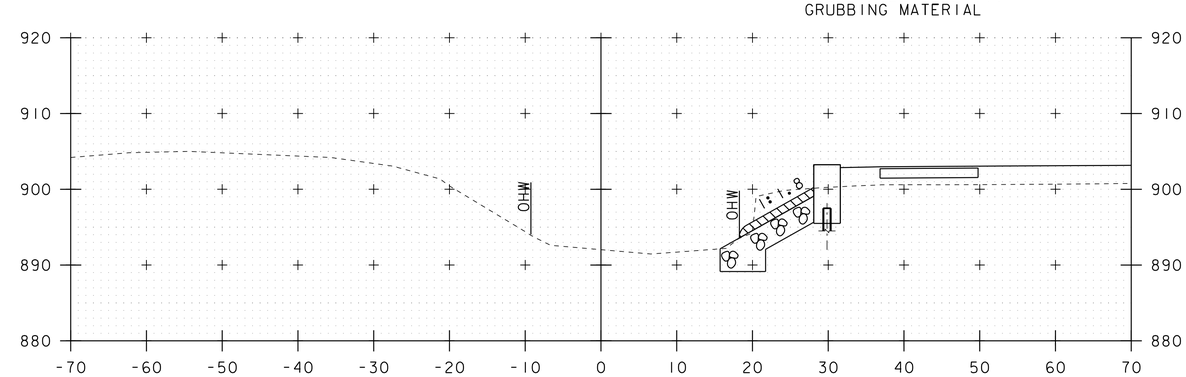

51+30

STA. 51+00 TO STA. 51+50

PROJECT NAME: CALAS	
PROJECT NUMBER: BHF 037-2(11)	
FILE NAME: s12b146xs.dgn	PLOT DATE: 02-JUN-2020
PROJECT LEADER: G. LAROCHE	DRAWN BY: G. ROKES
DESIGNED BY: G. ROKES	CHECKED BY: G. LAROCHE
CHANNEL CROSS SECTIONS 2	SHEET 134 OF 134